harman/kardon

AVR254

7 X 50W 7.1 CHANNEL A/V RECEIVER

SERVICE MANUAL

CONTENTS

ESD WARNING……2
LEAKAGE TESTING……3
BASIC SPECIFICATIONS……4
PACKAGING……5
FRONT PANEL CONTROLS……6
REAR PANEL CONNECTIONS……9
REMOTE CONTROL FUNCTIONS……12
CONNECTIONS/INSTALLATION……15
OPERATION……28
TROUBLESHOOTING GUIDE……32
REMOTE & PROCESSOR RESETS……33
DISASSEMBLY……34
UNIT EXPLODED VIEW……35
EXPLODED VIEW PARTS LIST……36
AMP BIAS ADJUSTMENT……37
BLOCK DIAGRAM……38
PCB DRAWINGS……39
ELECTRICAL PARTS LIST……46
SEMICONDUCTOR PINOUTS……88
SCHEMATICS……176
WIRING DIAGRAM……189

harman/kardon, Inc.

250 Crossways Park Dr.

Released 2008

Woodbury, New York 11797

Rev0 5/2008

Discontinued XXXX

ELECTROSTATICALLY SENSITIVE (ES) DEVICES

Some semiconductor (solid state) devices can be damaged easily by static electricity. Such components commonly are called Electrostatically Sensitive (ES) Devices. Examples of typical ES devices are integrated circuits and some field effect transistors and semiconductor "chip" components.

The following techniques should be used to help reduce the incidence of component damage caused by static electricity.

1. Immediately before handling any semiconductor component or semiconductor-equipped assembly, drain off any electrostatic charge on your body by touching a known earth ground. Alternatively, obtain and wear a commercially available discharging wrist strap device, which should be removed for potential shock reasons prior to applying power to the unit under test.
2. After removing an electrical assembly equipped with ES devices, place the assembly on a conductive surface such as aluminum foil, to prevent electrostatic charge build-up or exposure of the assembly.
3. Use only a grounded-tip soldering iron to solder or unsolder ES devices.
4. Use only an anti-static solder removal device. Some solder removal devices not classified as "anti-static" can generate electrical charges sufficient to damage ES devices.
5. Do not use freon-propelled chemicals. These can generate electrical change sufficient to damage ES devices.
6. Do not remove a replacement ES device from its protective package until immediately before you are ready to install it. (Most replacement ES devices are packaged with leads electrically shorted together by conductive foam, aluminum foil or comparable conductive material.)
7. Immediately before removing the protective material from the leads of a replacement ES device, touch the protective material to the chassis or circuit assembly into which the device will be installed.

   CAUTION : Be sure no power is applied to the chassis or circuit, and observe all other safety precautions.
8. Minimize bodily motions when handling unpackaged replacement ES devices. (Otherwise harmless motion such as the brushing together or your clothes fabric or the lifting of your foot from a carpeted floor can generate static electricity sufficient to damage an ES devices.

PRODUCT SAFETY NOTICE

Each precaution in this manual should be followed during servicing.

Components identified with the IEC symbol ⚠ in the parts list are special significance to safety. When replacing a component identified with ⚠, use only the replacement parts designated, or parts with the same ratings or resistance, wattage, or voltage that are designated in the parts list in this manual. Leakage-current or resistance measurements must be made to determine that exposed parts are acceptably insulated from the supply circuit before retuming the product to the customer.

SAFETY PRECAUTIONS

The following check should be performed for the continued protection of the customer and service technician.

LEAKAGE CURRENT CHECK

Measure leakage current to a known earth ground (water pipe, conduit, etc.) by connecting a leakage current tester between the earth ground and all exposed metal parts of the appliance (input/output terminals, screwheads, metal overlays, control shaft, etc.). Plug the AC line cord of the appliance directly into a 120V AC 60Hz outlet and turn the AC power switch on. Any current measured must not exceed o.5mA.

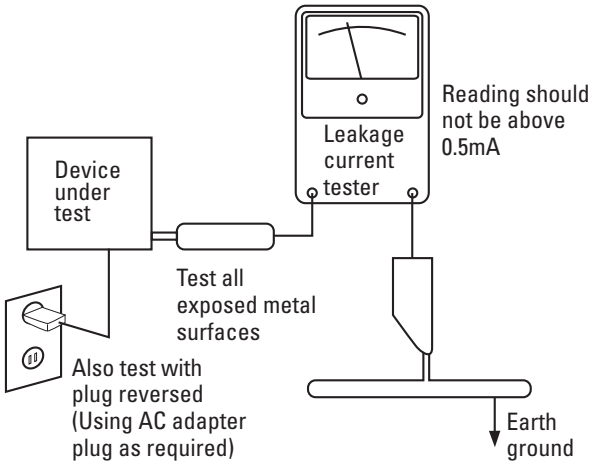

AC Leakage Test

ANY MEASUREMENTS NOT WITHIN THE LIMITS OUTLINED ABOVE ARE INDICATIVE OF A POTENTIAL SHOCK HAZARD AND MUST BE CORRECTED BEFORE RETURNING THE APPLIANCE TO THE CUSTOMER.

AVR 254 TECHNICAL SPECIFICATIONS

Audio Section

Stereo Mode
Continuous Average Power (FTC)

65 Watts per channel, 20Hz–20kHz,
@ <0.07% THD, both channels driven into 8 ohms

Seven-Channel Surround Modes
Power per Individual Channel

Front L & R channels:
50 Watts per channel
@ <0.07% THD, 20Hz–20kHz into 8 ohms

Center channel:
50 Watts @ <0.07% THD, 20Hz–20kHz into 8 ohms

Surround (L & R Side, L & R Back) channels:
50 Watts per channel
@ <0.07% THD, 20Hz–20kHz into 8 ohms

Input Sensitivity/Impedance	
Linear (High-Level)	200mV/47k ohms
Signal-to-Noise Ratio (IHF-A)	100dB
Surround System Adjacent Channel Separation	
Pro Logic I/II	40dB
Dolby Digital (AC-3)	55dB
DTS	55dB
Frequency Response	
@ 1W (+0dB, –3dB)	10Hz – 130kHz
High Instantaneous Current Capability (HCC)	±35 Amps
Transient Intermodulation Distortion (TIM)	Unmeasurable
Slew Rate	40V/µsec

FM Tuner Section

Frequency Range	87.5–108.0MHz
Usable Sensitivity	IHF 1.3µV/13.2dBf
Signal-to-Noise Ratio	Mono/Stereo 70/68dB
Distortion	Mono/Stereo 0.2/0.3%
Stereo Separation	40dB @ 1kHz
Selectivity	±400kHz, 70dB
Image Rejection	80dB
IF Rejection	90dB

Please register your AVR 254 on our Web site at **www.harmankardon.com.**

NOTE: You'll need the product's serial number. At the same time, you can choose to be notified about our new products and/or special promotions.

AM Tuner Section

Frequency Range	520–1720kHz
Signal-to-Noise Ratio	45dB
Usable Sensitivity	Loop 500µV
Distortion	1kHz, 50% Mod 0.8%
Selectivity	±10kHz, 30dB

Video Section

Television Format	NTSC
Input Level/Impedance	1Vp-p/75 ohms
Output Level/Impedance	1Vp-p/75 ohms
Video Frequency Response (Composite and S-Video)	10Hz–8MHz (–3dB)
Video Frequency Response (Component Video)	10Hz–100MHz (–3dB)
HDMI™	Version 1.3a with 10-bit Deep Color

General

Power Requirement	AC 120V/60Hz	
Power Consumption	65W idle, 540W maximum (7 channels driven)	
Dimensions	(Product)	(Shipping)
Width	17-5/16 inches (440mm)	21-7/8 inches (555mm)
Height	6-1/2 inches (165mm)	10-1/2 inches (266mm)
Depth	15 inches (382mm)	18-5/16 inches (465mm)
	(Product)	(Shipping)
Weight	27.1 lb (12.3kg)	32.8 lb (14.9kg)

Depth measurement includes knobs, buttons and terminal connections.
Height measurement includes feet and chassis.
All features and specifications are subject to change without notice.

Harman Kardon and Logic 7 are trademarks of Harman International Industries, Incorporated, registered in the United States and/or other countries. EzSet/EQ, Designed to Entertain and The Bridge logo are trademarks of Harman International Industries, Incorporated.

iPod is a trademark of Apple Inc., registered in the U.S. and other countries.

Audiovox is a registered trademark of Audiovox Corporation.

Blu-ray Disc is a trademark of the Blu-ray Disc Association.

CEA is a registered trademark of the Consumer Electronics Association.

Cirrus Logic is a registered trademark of Cirrus Logic, Inc.

Dolby and Pro Logic are registered trademarks, and MLP Lossless is a trademark, of Dolby Laboratories.

Manufactured under license from Dolby Laboratories. Dolby and the double-D symbol are trademarks of Dolby Laboratories. Copyright 1999-2004 Dolby Laboratories. All rights reserved.

DTS, DTS-ES and DTS Neo:6 are registered trademarks, and DTS 96/24, DTS-HD and DTS-HD Master Audio are trademarks, of DTS, Inc. Manufactured under license under U.S. Patent #'s: 5,451,942; 5,956,674; 5,974,380; 5,978,762; 6,226,616; 6,487,535; 7,003,467 and other U.S. and worldwide patents issued and pending. © 1996-2007 DTS, Inc. All Rights Reserved.

Faroudja DCDi Cinema is a registered trademark of Genesis Microchip Inc.

HD-DVD is a trademark of the DVD Format/Logo Licensing Corporation (DVD FLLC).

HDMI is a trademark or registered trademark of HDMI Licensing LLC.

SACD is a trademark of Sony Corporation.

TiVo is a registered trademark of TiVo Inc.

XM and XM Ready are registered trademarks of XM Satellite Radio.

1. Instruction manual ass'y - Accessories

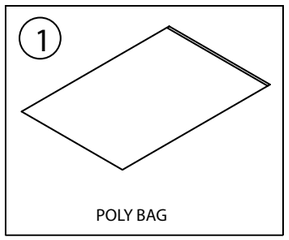

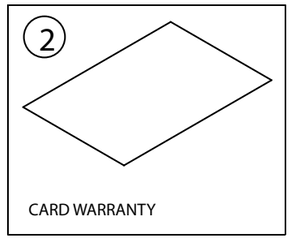

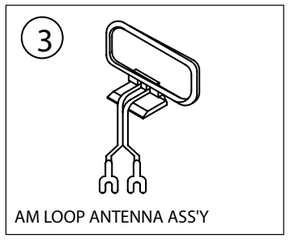

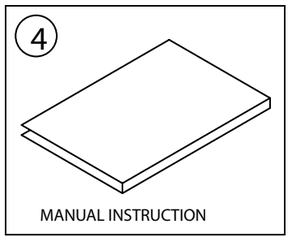

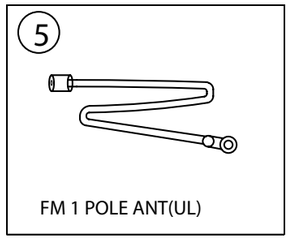

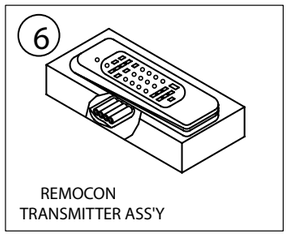

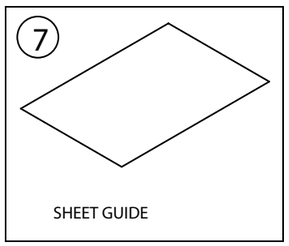

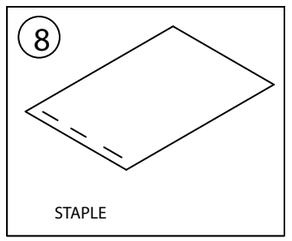

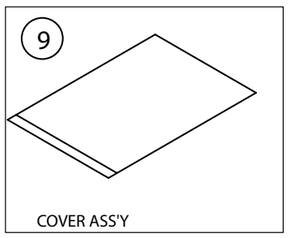

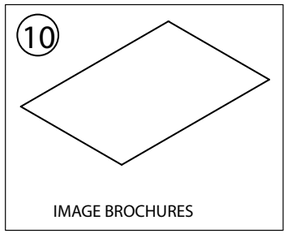

NO	DESCRIPTION	PARTS NO.	Q,ty
1	POLY BAG		1
2	CARD WARRANTY	CQE1A172X	1
3	AM LOOP ANTENNA	CSA1A020Z	1
4	INSTRUCTION MANUAL	visit www.harmankardon.com	1
5	FM 1 POL ANT(UL)	CSA1A019Z	1
6	REMOCON TRANSMITTER ASS'Y	CARTAVR254	1
7	SHEET GUIDE(QUICK START GUIDE)	CQE1A380Z	1
8	STAPLE		3
9	COVER ASS'Y	CGRAVR154ZA	1
1	COVER A	CGR1A331H63	1
2	COVER B	CGR1A332H63	1
3	SHEET,FRONT COVER	CQE1A219Z	1
4	PAD, COVER	CPS1A676	1
5	BAG,POLY		1
10	IMAGE BROCHURES		1

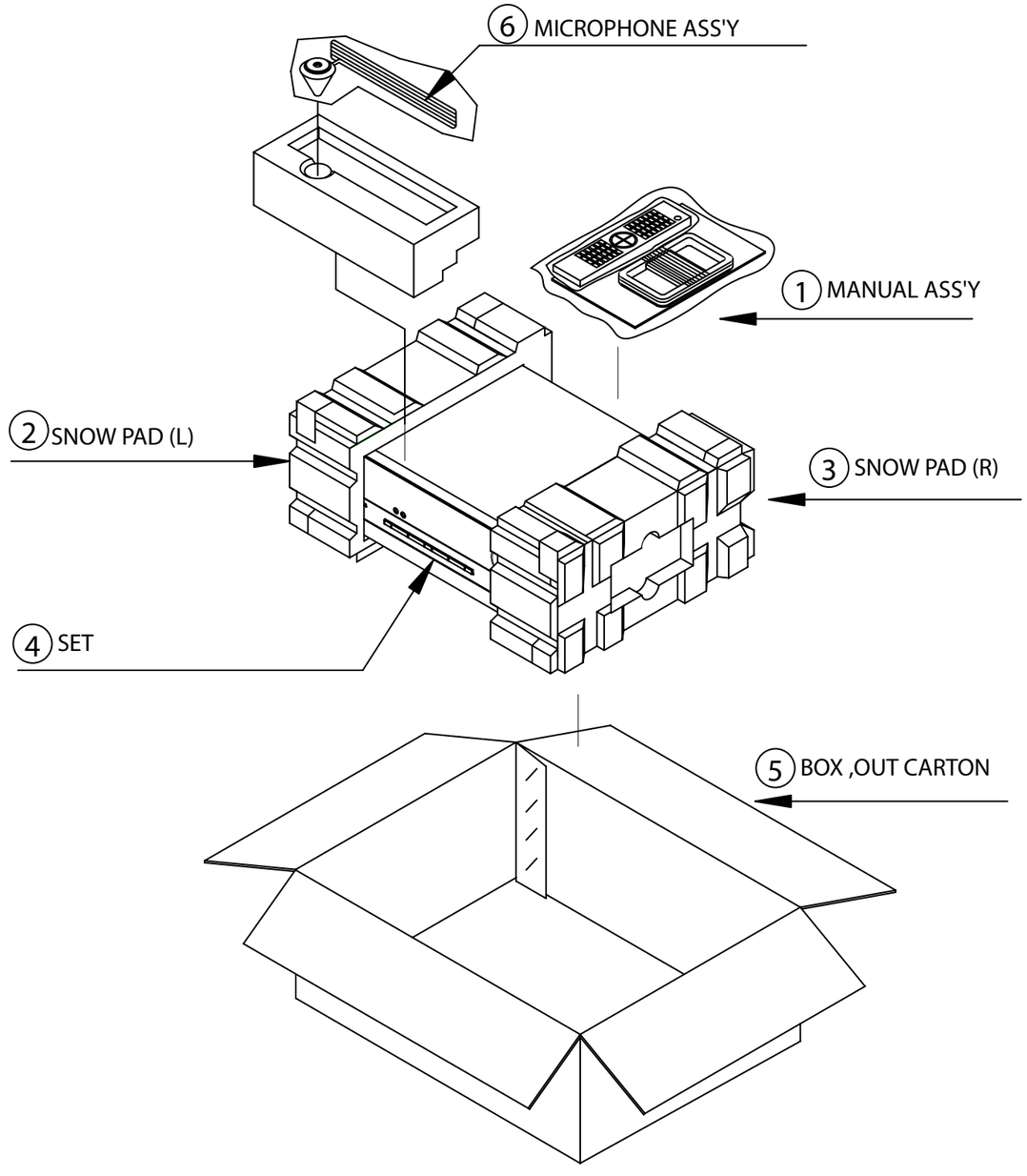

Item	Description	Part Number	Qty
1	Manual, remote, antenna ass'y		1
2	Foam End Pad, Left	CPS5A564Z	1
3	Foam End Pad, Right	CPS5A565Z	1
4	AVR254 Receiver	AVR 254	1
5	AVR254 Outer Carton	CPG1A854Y	1
6	Microphone Assembly	CJXAVR340MICRO	1

FRONT-PANEL CONTROLS

Main Power Switch: This mechanical switch turns the power supply on or off. It is usually left pressed in (On position), and cannot be turned on using the remote control.

Standby/On Switch: This electrical switch turns the receiver on for playback, or leaves it in Standby mode for quick turn-on using this switch or the remote control.

Power Indicator: This LED has four possible modes:

- **Main Power Off:** When the AVR is unplugged or the Main Power Switch is off, this LED is off.
- **Standby:** The LED is amber, indicating that the AVR is ready to be turned on.
- **On:** The LED is white, when the AVR is on and operating normally.
- **Protect:** If the PROTECT message ever appears, turn off the AVR and unplug it. Check all speaker wires for a possible short. If none is found, bring the unit to an authorized Harman Kardon service center for inspection and repair before using it again.

Source List: Press this button to select a source device, which is a component where a playback signal originates, such as DVD, cable TV, satellite or the tuner.

Volume Knob: Turn this knob to raise or lower the volume.

Message Display: Various messages appear in this two-line display in response to commands and changes in the incoming signal. In normal operation, the current source name appears on the upper line, while the surround mode is displayed on the lower line. When the on-screen display menu system (OSD) is in use, the current menu settings appear.

Headphone Jack/EzSet/EQ Microphone Input: Plug a 1/4" headphone plug into this jack for private listening.

This jack is also used to connect the supplied microphone for the EzSet/EQ procedure described in the Initial Setup section. To begin EzSet/EQ, plug the supplied microphone into this jack, place the microphone at the listening position, and follow the directions given in the Speaker Setup-Automatic Setup-EzSet/EQ on-screen menu.

Surround Modes: Press this button to select a surround sound (e.g., multichannel) mode. The Surround Modes menu will appear on screen, and the menu line will appear in the front-panel display.

Use the front-panel or remote ▲/▼ Buttons to highlight a different menu line: Auto Select, Virtual Surround, Stereo, Movie, Music or Video Game. Each line represents a type of audio signal, and is set to the preferred surround mode that you manually select.

Press the OK Button when the menu line is highlighted, and the available surround mode options for the current signal will appear. Use the ▲/▼ Buttons to select the desired mode, and press the OK Button to engage it. Press the Back/Exit Button to exit the Surround Modes menu.

See the Advanced Functions section for more information on surround modes.

Analog Audio, Video and Digital Audio Inputs: Connect a source component that will only be used temporarily, such as a digital camera or game console, to these jacks. Use only one type of audio and one type of video connection.

NOTES:

- Each of these connections (analog audio, digital audio and video) may be independently assigned to any source. See the Initial Setup section for information on setting up sources, including assigning audio and video inputs to a source.
- Although these jacks are labeled Optical 3, Coaxial 3 and Video 4 on the AVR, the AVR's menus refer to them as the Optical Front, Coaxial Front, Composite Front, S-Video Front and Analog Front inputs.

Speaker/Channel Input Indicators: The box icons indicate which speaker positions you have configured (see the Initial Setup Section), and the size (frequency range) of each speaker. The letters will light inside the boxes to indicate which channels are present in the incoming signal.

Navigation: These buttons are used to navigate the AVR's menus and to operate the tuner.

Remote IR Sensor: This sensor receives infrared (IR) commands from the remote control. It is important to ensure that it is not blocked. If covering the sensor is unavoidable, such as when the AVR 254 is placed inside a cabinet, you may use an optional Harman Kardon HE 1000, or other infrared receiver, connecting it to the Remote IR Input on the AVR 254's rear panel. Alternatively, connect the Remote IR Output of another compatible component to the AVR 254's Remote IR Input. Point the remote at the other device's remote sensor, and the command will be transmitted to the AVR 254. An external IR "blaster" may also be used, positioned to point at this area.

AVR Settings Button: Press this button to access the AVR's main menu.

Info Settings Button: Press this button to directly access the AVR's Source Info submenu, which contains the settings for the current source.

Resolution: Each press of this button changes the AVR's video output resolution to these settings: 480i, 480p, 720p, 1080i or 1080p.

IMPORTANT NOTE: If the AVR's video output resolution is set higher than the capabilities of the actual connection, you will not see a picture. If the best video connection from the AVR to the TV is either composite or S-video, press this button until the resolution is set to 480i.

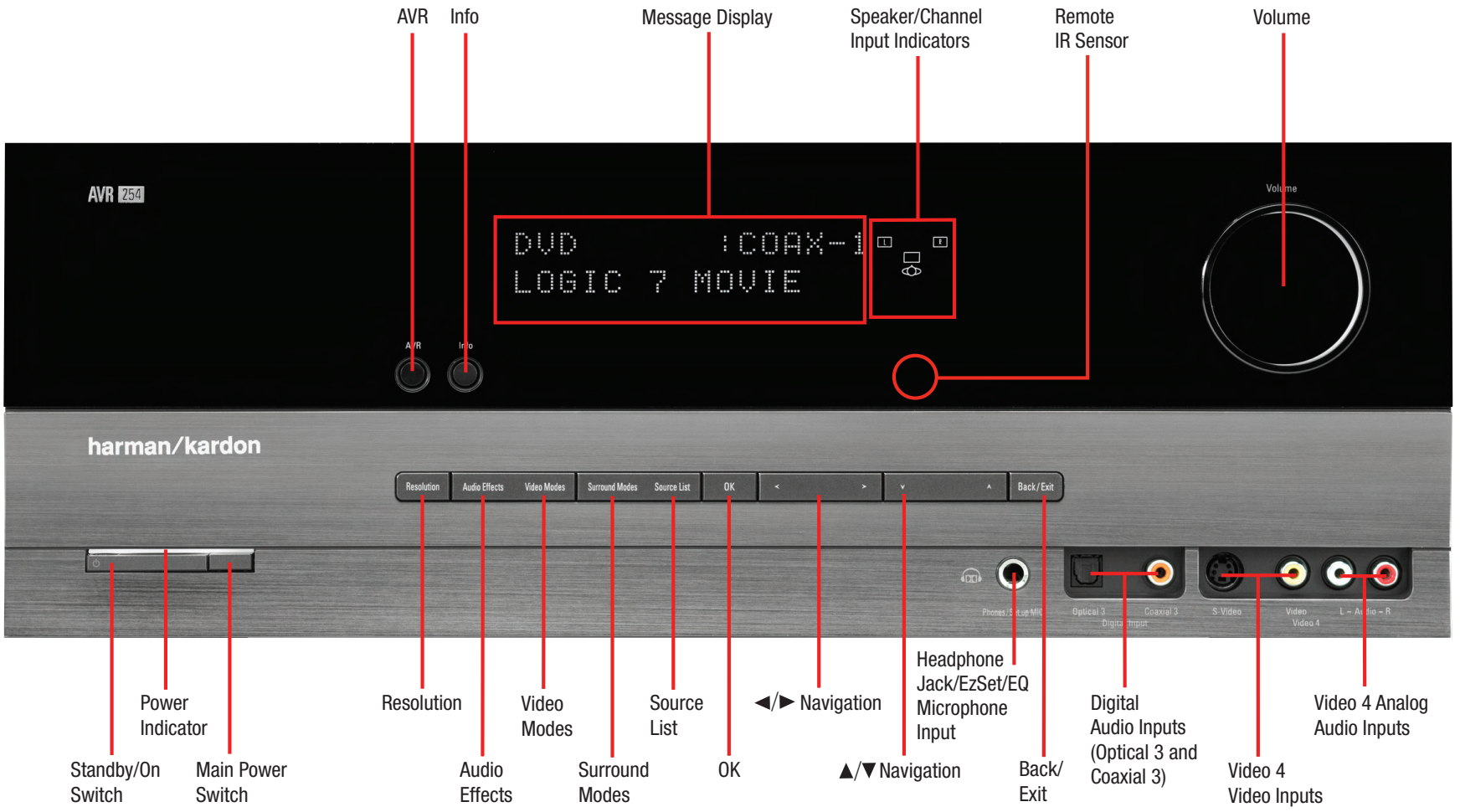

NOTE: To make it easier to follow the instructions throughout the manual that refer to this illustration, a copy of this page may be downloaded from the Product Support section at www.harmankardon.com.

FRONT-PANEL CONNECTIONS

Audio Effects: Press this button to directly access the Audio Effects submenu, which allows adjustment of the tone and other controls. See the Initial Setup section for more information.

Video Modes: Press this button for direct access to the Video Modes submenu, which contains settings that may be used to improve the picture if necessary after you have adjusted the picture settings using the video display or TV.

OK: Press this button to select the currently highlighted item.

Back/Exit: Press this button to return to the previous menu, or to exit the menu system.

REAR-PANEL CONNECTIONS

AM and FM Antenna Terminals: Connect the included AM and FM antennas to their respective terminals for radio reception.

XM Antenna Jack: Plug in an XM Connect and Play or Mini Tuner antenna module here. The XM antenna module is purchased separately, and should specify that it is for home use with an XM Ready® product. You will need to subscribe to the XM service, which is available separately, and activate the service for your antenna module. (XM service is not available in Alaska and Hawaii.)

Front, Center and Surround Speaker Outputs: Use two-conductor speaker wire to connect each set of terminals to the correct speaker. Remember to observe the correct polarity (positive and negative connections). Always connect the positive lead to the colored terminal on the receiver and the red terminal on the speaker. Connect the negative lead to the black terminal on both the receiver and the speaker. See the Connections section for more information on connecting your speakers.

Surround Back/Zone 2 Speaker Outputs: These speaker outputs are used for the surround back channels in a 7.1-channel home theater, or may be reassigned to a remote room for multizone operation. When these outputs are reassigned for multizone operation, only a 5.1-channel configuration will be available in the main listening room. Use the on-screen menu system to configure these channels as desired.

As with the other speaker outputs, remember to observe proper polarity by connecting the positive and negative output terminals to the corresponding terminals on each speaker.

Subwoofer Output: If you have a powered subwoofer with a line-level input, connect it to this jack.

Preamp Outputs: Connect these jacks to an external amplifier if more power is desired.

The Surround Back/Zone 2 Preamp Outputs may be used with an external amplifier to power the surround back channels, or to power the remote zone of a multizone system. Use the on-screen menu system to configure these channels as desired.

Remote Infrared (IR) Input and Output: When the remote IR receiver on the front panel is blocked, such as when the AVR is placed inside a cabinet, connect an optional IR receiver to the Remote IR Input jack for use with the remote control. The Remote IR Output may be connected to the Remote IR Input of a compatible product to enable remote control through the AVR. This is particularly useful in multizone applications to control a source device from the remote room (when used with the Zone 2 IR Input). When several source devices are used, connect them in "daisy chain" fashion.

Zone 2 Infrared (IR) Input: Connect a remote IR receiver located in the remote zone of a multizone system to this jack to control the AVR (and any source devices connected to the Remote IR Output) from the remote zone.

Composite and S-Video 1, 2 and 3 Video Inputs: These jacks may be used to connect your video-capable source components (e.g., VCR, DVD player, cable TV box) to the receiver. Use only one type of video connection for each source. These inputs are assignable, which means they may be paired with any analog or digital audio inputs. This will be explained in more detail in subsequent sections of this manual.

NOTE: The Video 2 inputs are associated with a set of outputs. Consider connecting a video recorder here.

Composite and S-Video 2 Outputs: Connect one of these analog video outputs to the composite or S-video inputs of a recording device. A signal is available at these outputs whenever an analog video source is playing. HDMI and component video signals are not available for recording.

Composite and S-Video Monitor Outputs: If any of your sources use composite or S-video connections, connect one or both of these monitor outputs to the corresponding inputs on your television or video display. If your video display is equipped with HDMI or component video inputs, these connections are unnecessary. Connect the HDMI Monitor Output (if available, otherwise use the Component Video Monitor Output) to your TV, and the AVR 254 will convert the composite or S-video source signal to the correct format for a single video cable connection to the TV.

HDMI Inputs and Output: HDMI (High-Definition Multimedia Interface) is a connection for transmitting digital audio and video signals between devices. With the AVR 254's powerful processor, you may connect up to three HDMI-equipped source devices to the HDMI inputs using a single-cable connection, while benefiting from superior digital audio and video performance. If your video display is not HDMI-compatible, connect the device to one of the analog video inputs, then pair it with an analog or digital audio input.

If your video display has an HDMI input, make just the HDMI video connection to your display; the AVR 254 will automatically transcode analog video signals to the HDMI format, upscaling to as high as 1080p.

Analog 1 – 5: Connect the left and right analog audio outputs of a source device to any of these inputs. These inputs are assignable, which means they may be paired with any video inputs, as explained in subsequent sections of this manual.

NOTES:

- The Analog 3 through 5 connectors physically line up below the Video 1 through 3 (composite and S-video) connectors. For convenience, consider using Analog 3 with Video 1, Analog 4 with Video 2 and Analog 5 with Video 3, if appropriate for your system.
- The Analog 1 and 2 connectors don't physically line up with any analog video inputs. Consider using them for audio-only devices, such as a CD player or cassette tape deck.
- The Analog 2 and 4 inputs are each associated with a set of outputs. Consider using the Analog 2 connectors for an audio recorder, and the Analog 4 connectors for a video recorder (along with the Video 2 connectors).
- You may optionally connect a source to both an analog and digital audio input. This is useful for making recordings, for multizone applications or simply as a backup.

REAR-PANEL CONNECTIONS

Analog 2 and 4 Outputs: Connect either of these analog audio outputs to the analog audio inputs of a recording device. A signal is available at these outputs whenever an analog audio source is playing. However, the AVR 254 does not convert digital audio sources to analog for recording.

Coaxial 1/2 and Optical 1/2 Digital Audio Inputs: If a source has a compatible digital audio output, and if you are not using an HDMI connection for audio for the device, connect it to one of these jacks to hear digital audio formats, such as Dolby Digital, DTS and linear PCM. Use only one type of digital audio connection for each source.

Coaxial Digital Audio Output: If a source is also an audio recorder, connect a coaxial digital audio output to the recorder's input for improved recording quality. Only PCM digital audio signals are available for recording.

Stereo Jack: Enjoy audio from an iPod (not included), CD player or other portable player by connecting its headphone jack to this input using a 1/8" stereo mini-plug cable (not included). Video and still-image playback are not available at this input.

6-/8-Channel Inputs: Connect the multichannel analog audio outputs of a DVD-Audio, SACD™, Blu-ray Disc™ or HD-DVD™ player (or any other external decoder) to these jacks to enjoy these formats.

> **NOTE:** When the multichannel player has an onboard digital decoder, it is not necessary to connect it to the 6-/8-Channel Analog Audio Inputs. Only a digital audio connection (HDMI, coaxial or optical) is needed.

Component Video 1 and 2 Inputs: If a video source (e.g., DVD player or HDTV tuner) has analog component video (Y/Pb/Pr) capability, and if you are not using an HDMI connection for the device, then connect the component video outputs of the source to one of the two component video inputs. Do not make any other video connections to that source.

Component Video Monitor Outputs: If you are using one of the Component Video Inputs and your television or video display is component-video-capable, and if you are not connecting the HDMI Output to your display, connect these jacks to the corresponding inputs on your video display.

> NOTES:
>
> - Due to copy-protection restrictions, there is no output at the Component Video Monitor Outputs for copy-protected sources.
> - Composite and S-video signals are upscaled to as high as 1080i and available at these outputs. If your video display's best connection is component video, it is the only video connection required from the AVR to the display.

RS-232 Serial Port: This specialized connector may be used with your personal computer in case we offer a software upgrade for the receiver at some time in the future.

RS-232 Mode: Leave this switch popped out in the Operate position unless the AVR 254 is being upgraded.

RS-232 Reset: This switch is only used during a software upgrade. A standard processor reset is performed by pressing and holding the front-panel OK Button.

Switched AC Accessory Outlet: You may plug the AC power cord of one source device into this outlet, and it will turn on whenever you turn on the receiver. Do not use a source that consumes more than 50 watts of power.

AC Power Cord: After you have made all other connections, plug the AC power cord into an unswitched outlet.

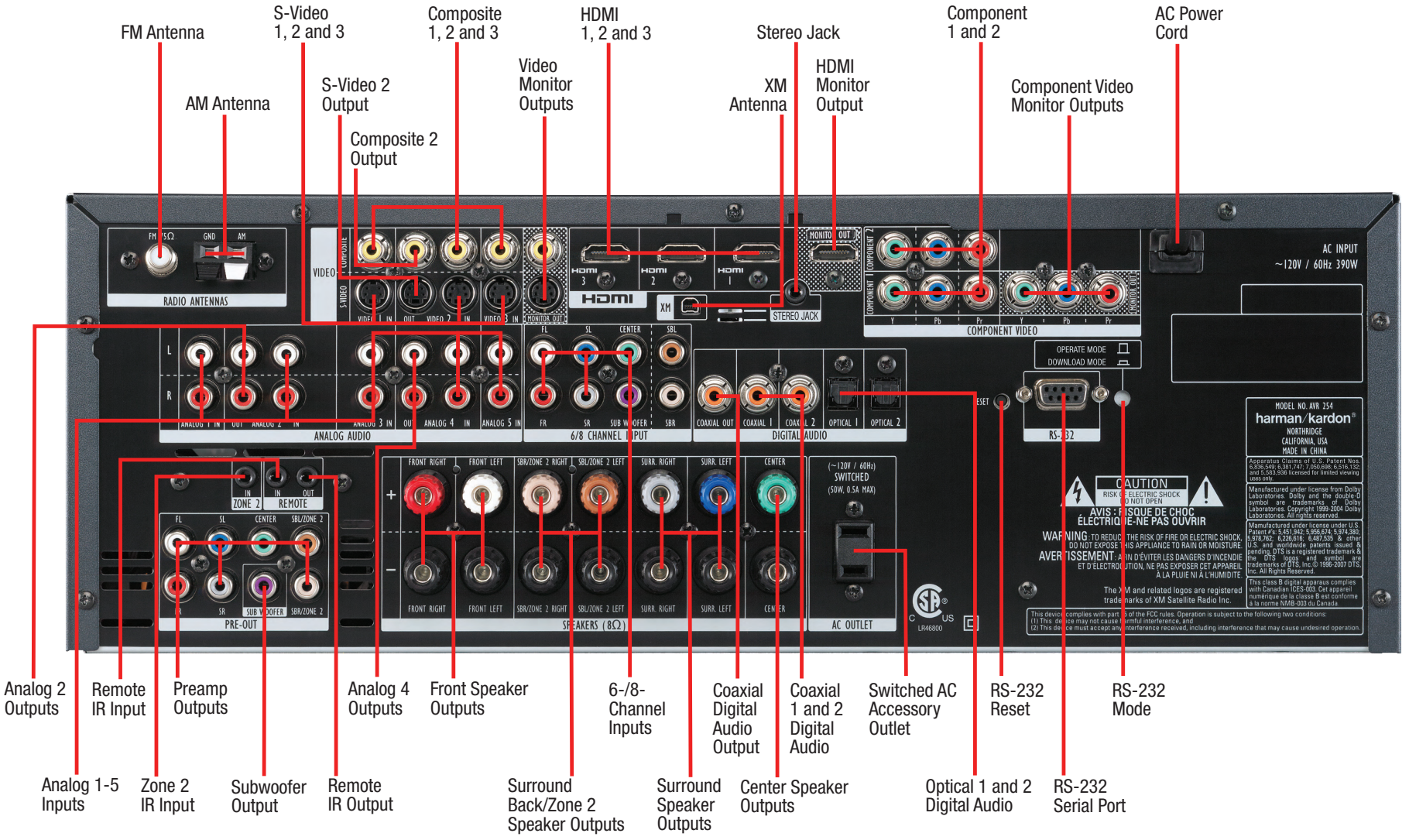

NOTE: To make it easier to follow the instructions throughout the manual that refer to this illustration, a copy of this page may be downloaded from the Product Support section at www.harmankardon.com. All connectors are inputs except as indicated.

REMOTE CONTROL FUNCTIONS

The AVR 254 remote is capable of controlling 7 devices, including the AVR itself. During the installation process, you may program the codes for each of your source components into the remote. Each time you wish to use the codes for any component, first press its Selector button. This changes the button functions to the appropriate codes.

Each Source Selector has been preprogrammed to control certain types of components, with only the codes specific to each brand and model changing, depending on which product code is programmed. The AUX Source Selector may be used for any of five device types: a CD player, an HDTV set-top box, a PVD recorder used with cable or satellite television, a TiVO® set-top box or a VCR. The device mode will depend on the product code programmed into the AUX Source Selector as described in the Initial Setup section. CD players use codes beginning with a 0, 1 or 2; VCRs use codes beginning with a 3 or 4; HDTV set-top boxes use codes beginning with a 6; PVDs use codes beginning with a 7 and TiVO set-top boxes use codes beginning with an 8. The remote automatically switches to the correct device mode, and it will operate the device as described in the function list in Table A13 in the appendix.

Similarly, the CBL/SAT Source Selector automatically selects cable or satellite television operation depending on the first digit of the product code: 0, 1 or 2 for cable and 3 or 4 for satellite boxes.

IMPORTANT NOTE: All of the AVR 254's audio and video inputs are independently assignable. As explained in the Initial Setup section, it is necessary to set up each source, which includes selecting the inputs to which the device is physically connected. Any device may be connected to any compatible input and given any name (e.g. DVD or Game). The Source Selectors' device types may be changed. For example, the TV Source Selector may be reprogrammed to operate a DVD player.

Most of the buttons on the remote have dedicated functions, although the precise codes transmitted will vary depending on which source device has been selected for operation. Due to the wide variety of functions unique to various source devices, we have included only a few of the most-often used functions on the remote, including alphanumeric keys, transport controls, television-channel control, menu access and power on and off. Please refer to the descriptions below for more specific information.

Some buttons are only used to operate the AVR, and their functions are available at any time, even if the remote has been switched to another device's mode: AVR Power On and Off, Audio Effects, Video Modes, Surround Modes, Volume and Mute. Press the AVR Settings button near the bottom of the remote to return it to AVR mode.

Any given button may have different functions, depending on which component is being controlled. Some buttons are labeled with these functions. For example, the Page Up/Down Buttons are labeled for use as Channel Up/Down Buttons when controlling a television or cable box. See Table A13 in the appendix for listings of the different functions for each type of component.

IR Transmitter Lens: As buttons are pressed on the remote, infrared codes are emitted through this lens. Make sure it is pointing toward the component being operated.

AVR Power On Button: Press this button to turn on the AVR. The Master Power Switch on the AVR 254's front panel must first have been switched on.

Device Power Off Button: When the remote has been switched to a device's mode by pressing its Source Selector, press this button to turn off the device.

Device Power On Button: When the remote has been switched to a device's mode by pressing its Source Selector, press this button to turn on the device.

Mute Button: Press this button to mute the AVR 254's speaker and headphone outputs temporarily. To end the muting, press this button or adjust the volume. Muting is also canceled when the receiver is turned off.

AVR Power Off Button: Press this button to turn off the AVR 254.

Source Selectors: Press one of these buttons to select a source device, which is a component where a playback signal originates, e.g., DVD, CD, cable TV, satellite or HDTV tuner. This will also turn on the receiver and switch the remote's mode to operate the source device. The first press of the Radio Selector switches the AVR to the last-used tuner band (AM, FM or XM). Each successive press changes the band.

Audio Effects: This button is only used to operate the AVR. Press it to directly access the Audio Effects submenu, which allows adjustment of the tone and other controls. Each successive press scrolls to the next line in the menu. See the Initial Setup section for more information.

Video Modes: This button is only used to operate the AVR. Press it for direct access to the Video Modes submenu, which contains settings that may be used to improve the picture if necessary after you have adjusted the picture settings using the video display or TV. Each successive press scrolls to the next line in the menu. See the Advanced Functions section for more information.

Surround Modes: This button is only used to operate the AVR. Press it to directly access the Surround Modes submenu. Each successive press scrolls to the next line in the menu, or use the ▲/▼ Buttons to scroll to the next line: Auto Select, Virtual Surround, Stereo, Movie, Music or Video Game. Each menu line represents a type of audio signal, and is set to the preferred surround mode that you manually select.

Press the OK Button when the menu line is highlighted, and the available surround mode options for the current signal will appear. Use the ▲/▼ Buttons to select the desired mode, and press the OK Button to engage it. Press the Back/Exit Button to exit the Surround Modes menu and display the next higher menu in the hierarchy.

See the Advanced Functions section for more information on surround modes.

Sleep Settings Button: Press this button to activate the sleep timer, which turns off the receiver after a programmed period of time of up to 90 minutes. Each successive press increases the timer by 10 minutes, ending with the "Sleep Off" message.

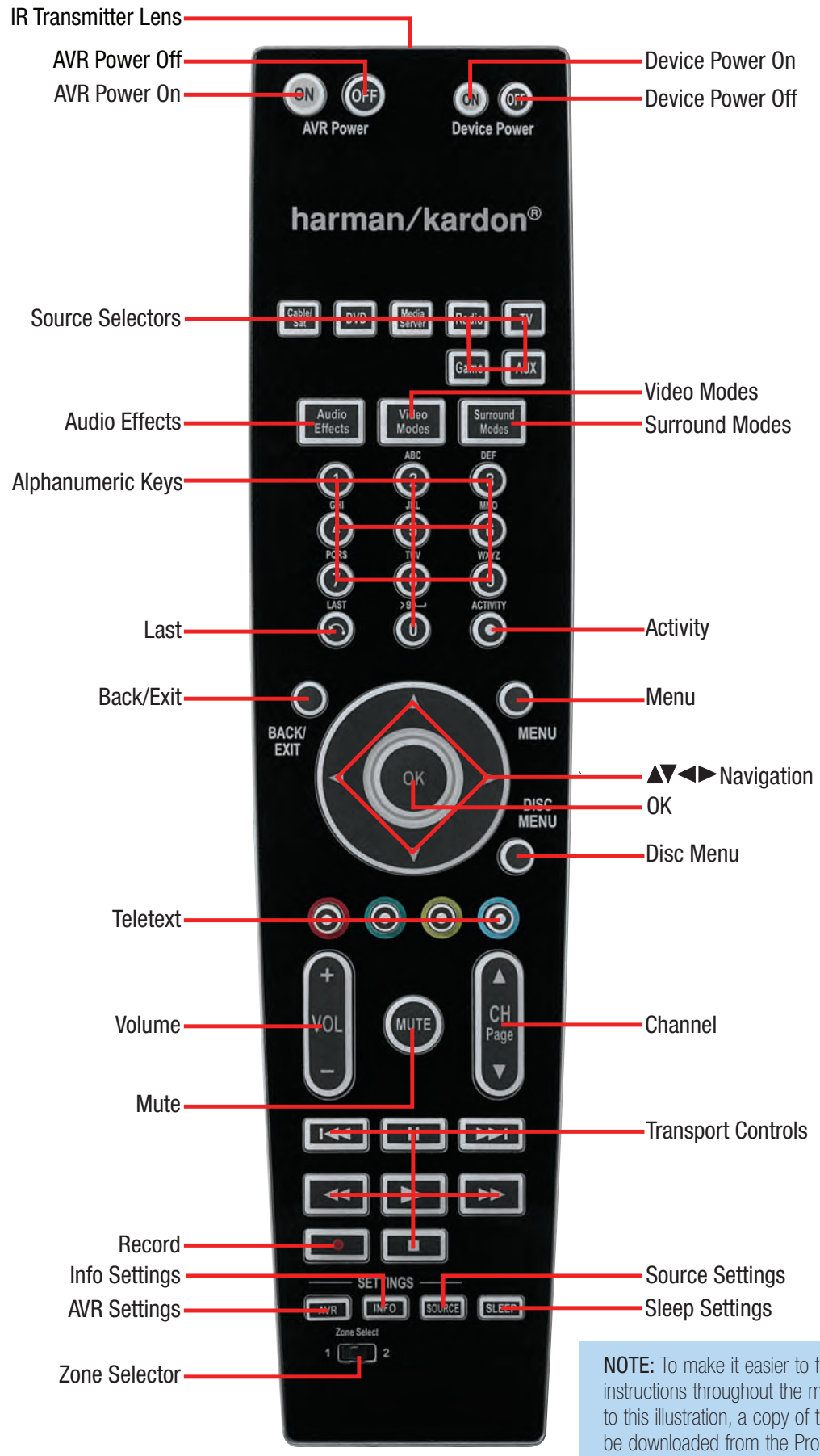

NOTE: To make it easier to follow the instructions throughout the manual that refer to this illustration, a copy of this page may be downloaded from the Product Support section at www.harmankardon.com.

REMOTE CONTROL FUNCTIONS

Volume Control: Press this button to raise or lower the volume.

Navigation (▲/▼/◀/▶) and OK Buttons: These buttons are used to make selections within the menu system. These buttons are also used to operate the tuner.

Alphanumeric Keys: Use these buttons to enter numbers for radio station frequencies or to select station presets. Use the alphabetic keys with other products as required. When prompted for a text entry, the first press of the key displays the first letter printed above the key. Each additional press displays the other letters. When the desired letter appears, wait a moment for it to be entered before moving to the next character.

Last Channel: When controlling a cable, satellite or HDTV set-top box or a TV, press this button to return to the previous television channel.

Activity: This button may be programmed to transmit a series of commands with a single press, which is useful for powering on all devices and selecting the correct settings on each device, or for selecting multi-digit channels with a single press. See the Advanced Functions section for more information on Activities.

Back/Exit: Press this button to return to the previous menu or to exit the menu system. This button may have the same effect with some source devices.

Menu Button: This button is used to display the main menu on some source devices. To display the AVR 254's main menu, press the AVR Settings Button.

Disc Menu: While a DVD is playing, press the DVD Source Selector, then this button, to display the disc's menu.

Teletext Buttons: Use these buttons with a Teletext-capable television if your broadcast, cable or satellite provider offers Teletext service. They are normally not used in North America. These buttons are also used to operate some source devices. See Table A13 in the appendix for details.

Channel/Page Control: When the tuner has been selected, this control selects a preset radio station. Press these buttons while operating a cable, satellite or HDTV set-top box or a television to change channels. The Page control may be available with some DVD players when playing a DVD Audio disc containing pages of images associated with a track.

Record Button: Use this button to make recordings when an audio or video recorder is in use.

AVR Settings Button: Press this button to display the AVR's Main Menu. It is also used to switch the remote's device mode from a source device to the AVR.

Info Settings Button: Press this button to display the AVR's Info Menu, which contains the settings for the current source.

Source Settings Button: Press a Source Selector and then this button to display a source device's settings menu.

Zone Selector: Use this switch to select whether AVR commands will affect the main listening area (Zone 1) or the remote zone of a multizone system (Zone 2). For normal operation, leave the switch in the Zone 1 position.

Track Skip: These buttons have no effect on the receiver, but are used with source components to change tracks or chapters.

Transport Controls: These buttons have no effect on the receiver, but are used to control many source components.

CONNECTIONS

There are different types of audio and video connections used to connect the receiver to the speakers and video display, and to connect the source devices to the receiver. To make it easier to keep them all straight, the Consumer Electronics Association (CEA®) has established a color-coding standard. See Table 1.

Table 1 – Connection Color Guide

Audio Connections		
	Left	Right
Front **(FL/FR)**		
Center **(C)**		
Surround **(SL/SR)**		
Surround Back **(SBL/SBR)**		
Subwoofer **(SUB)**		
Digital Audio Connections		
Coaxial		
Optical	Input	
Video Connections		
Component	Y Pb Pr	
Composite		
S-Video		
HDMI™ Connections (digital audio/video)		
HDMI		

Types of Connections

This section will briefly review different types of cables and connections.

Speaker Connections

Speaker cables carry an amplified signal from the receiver's speaker terminals to each loudspeaker. Speaker cables contain two wire conductors, or leads, inside plastic insulation. The two conductors are usually differentiated in some way, by using different colors, or stripes, or by adding a ridge to the insulation. Sometimes the wires are different, colors e.g. copper-colored and silver.

The differentiation is important because each speaker must be connected to the receiver's speaker-output terminals using two wires, one positive (+) and one negative (–), referred to as speaker polarity. It's important to maintain the proper polarity for all speakers in the system, or performance can suffer, especially for the low frequencies.

Always connect the positive terminal on the loudspeaker, which is usually colored red, to the positive terminal on the receiver, which is colored as shown in the Connection Color Guide (Table 1). Similarly, always connect the black negative terminal on the speaker to the black negative terminal on the receiver.

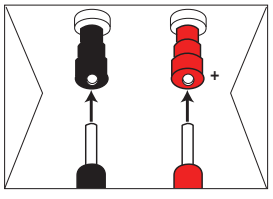

The AVR 254 uses binding-post speaker terminals that can accept banana plugs or bare-wire cables. Banana plugs are simply plugged into the hole in the middle of the terminal cap. See Figure 1.

Figure 1 – Binding-Post Speaker Terminals With Banana Plugs

Bare wire cables are installed as follows (see Figure 2):

1. Unscrew the terminal cap until the pass-through hole in the collar is revealed.
2. Insert the bare end of the wire into the hole.
3. Hand-tighten the cap until the wire is held snugly.

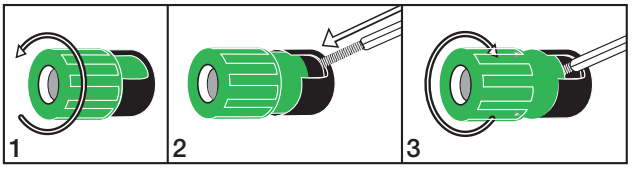

Figure 2 – Binding-Post Speaker Terminals With Bare Wires

Subwoofer

The subwoofer is a specialized type of loudspeaker used to play only the low frequencies (bass), which require much more power than the other speaker channels. In order to obtain the best results, most speaker manufacturers offer powered subwoofers, in which the speaker contains its own amplifier on board. Usually, a line-level (nonamplified) connection is made from the receiver's Subwoofer Output to a corresponding jack on the subwoofer, as shown in Figure 3, but sometimes the subwoofer is connected to the receiver using the front left and right speaker outputs, as with passive in-wall subwoofers, and then the front left and right speakers are connected to terminals on the subwoofer.

Although the subwoofer output looks similar to the analog audio jacks used for the various components, it is filtered and only allows the low frequencies to pass. Don't connect this output to any other devices. Although doing so won't cause any harm, performance will suffer.

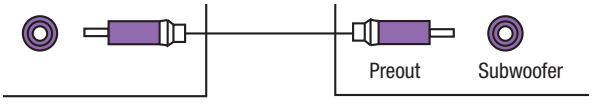

Figure 3 – Subwoofer

Connecting Source Devices to the AVR

The AVR 254 is designed to process audio and video input signals, playing back the audio and displaying the video on a television or monitor connected to the AVR. These signals originate in what are known as "source devices," including your DVD player, CD player, DVR (digital video recorder) or other recorder, tape deck, game console, cable or satellite television box or MP3 player. Although the tuner is built into the AVR, it also counts as a source, even though no external connections are needed, other than the FM and AM antennas and the XM antenna module.

Separate connections are required for the audio and video portions of the signal, except for digital HDMI connections. The types of connections used depend upon what's available on the source device, and for video signals, the capabilities of your video display.

Audio Connections

There are two formats for audio connections: digital and analog. Digital audio signals are required for listening to sources encoded with digital surround modes, such as Dolby Digital and DTS, or for non-compressed PCM digital audio. There are three types of digital audio connections: HDMI, coaxial and optical. Any type of digital audio connection may be used for each source device, but never more than one for the same source. However, it's okay to make both analog and digital audio connections to the same source.

NOTE: Since HDMI signals may carry both audio and video, if your video display device has an HDMI input, make a single HDMI connection from your source device (such as a DVD player) to the AVR. No separate digital audio connection is usually required. Make sure to turn the volume on your television all the way down.

Digital Audio

The AVR 254 is equipped with three HDMI (High-Definition Multimedia Interface) inputs, and one output. HDMI technology enables digital audio and video information to be carried using a single cable, thus delivering the highest quality picture and sound.

There are different HDMI versions, depending on the capability of the source device and the type of signal it is capable of transmitting.

In addition, receivers and processors such as the AVR 254 may handle the incoming signal in several different ways, depending on their capability as well. The AVR 254 uses HDMI version 1.3a, and is capable of processing both the audio and video components of the HDMI data, minimizing the number of cable connections in your system. Thanks to the higher bandwidth and speed of HDMI version 1.3a, the AVR 254 implements Deep Color, which increases by an order of magnitude the shades of color that can be displayed; and the latest lossless multichannel audio formats, including Dolby TrueHD and DTS-HD Master Audio.

NOTE: Some DVD-Audio, SACD, HD-DVD and Blu-ray Disc players, output mulitchannel audio only through the source's multichannel analog outputs. For those devices, make a separate analog audio connection in addition to the HDMI connection, which is still used for video and to listen to Dolby Digital, DTS or PCM materials that may be stored on the disc.

In addition, the AVR 254 will convert analog video signals to the HDMI format, upscaling to high-definition 1080p resolution. You may view the AVR 254's own on-screen display menus using the HDMI output.

The physical HDMI connection is simple. The connector is shaped for easy plug-in (see Figure 4). If your video display has a DVI input and is HDCP-compliant, you may use an HDMI-to-DVI adapter (not included) to connect it to the AVR's HDMI Output, but a separate audio connection is required. HDMI cable runs are usually limited to about 10 feet, depending on the type of cable used.

Figure 4 – HDMI Connection

If your video display or source device is not HDMI-capable, use one of the analog video connections (composite, S- or component video) and, if available on your source device, either a coaxial or optical digital audio connection.

Coaxial digital audio jacks are usually color-coded in orange. Although they look similar to analog jacks, they should not be confused, and you should not connect coaxial digital audio outputs to analog inputs or vice versa. See Figure 5.

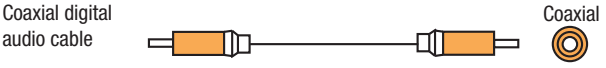

Figure 5 – Coaxial Digital Audio

Optical digital audio connectors are normally covered by a shutter to protect them from dust. The shutter opens as the cable is inserted. Input connectors are color-coded using a black shutter, while outputs use a gray shutter. See Figure 6.

Figure 6 – Optical Digital Audio

Analog Audio

Analog connections require two cables, one for the left channel (white) and one for the right channel (red). These two cables are often attached to each other for most of their length. See Figure 7.

Most sources that have digital audio jacks also have analog audio jacks, although some older types of sources, such as tape decks, only have analog jacks. For sources that are capable of both digital and analog audio, you may make both connections.

The analog audio connection is strongly recommended if you intend to use the source with the multizone system. It's required if you will be using the multizone preamp outputs with an external amplifier to power your remote speakers, as the AVR 254's multizone system is not capable of converting the digital signal to analog format. It's suggested that you also use the analog audio connections when using the Surround Back/Zone 2 speaker outputs, in case another two-channel digital audio source is in use in the main listening area. The AVR 254 is only capable of processing one PCM source at a time.

You may only record materials from DVDs or other copy-protected sources, using analog connections. Remember to comply with all copyright laws, if you choose to make a copy for your own personal use.

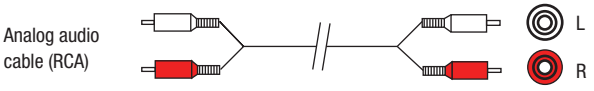

Figure 7 – Analog Audio

Multichannel analog connections are used with some high-definition sources where the copy-protected digital content is decoded inside the source. These types of connections are usually used with DVD-Audio, SACD, Blu-ray Disc, HD-DVD and other multichannel players. See Figure 8. However, the multichannel analog audio connection is not

CONNECTIONS

required for DVD-Audio players compliant with HDMI version 1.1 or better, or HD-DVD and Blu-ray Disc players that decode the digital audio internally and output linear PCM signals in digital format. Consult the owner's guide for your disc player for more information.

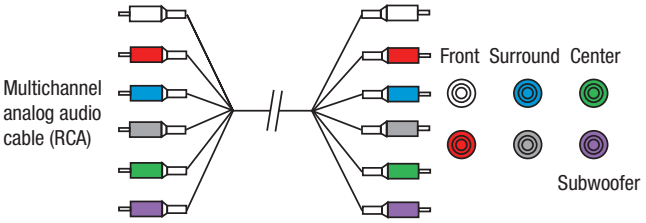

Figure 8 – Multichannel Analog Audio

The AVR 254 also offers an analog audio input on the rear panel in the form of a stereo 1/8" mini jack. Connect the headphone output of any audio source, such as an MP3 player or portable CD player, to the Stereo Jack input. See Figure 9.

Figure 9 – Stereo Jack

Video Connections

Although some sources only produce an audio signal (e.g., CD player, tape deck), many sources output both audio and video signals (e.g., DVD player, cable television box, HDTV tuner, satellite box, VCR, DVR). In addition to the audio connection, make one type of video connection for each of these sources (only one at a time for any source).

Digital Video

If you have already connected a source device to one of the HDMI inputs as explained in the Digital Audio Connections section, you have automatically made a video connection at the same time, as the HDMI signal includes both digital audio and video components.

If the source device is not capable of transmitting its digital audio signal through the HDMI connection, use one of the coaxial or optical digital audio inputs for the source.

If a multichannel analog audio connection is required for certain lossless formats (e.g., DVD-Audio, SACD, HD-DVD or Blu-ray Disc), you may make both audio connections. To listen to the multichannel disc, set the Audio Auto Polling setting to the 6/8CH inputs, and the AVR will automatically select it when no digital signal is output by the player.

Analog Video

There are three types of analog video connections: composite video, S-video and component video.

Composite video is the basic connection most commonly available. The jack is usually color-coded yellow, and looks like an analog audio jack, although it is important never to confuse the two. Do not plug a composite video cable into an analog or coaxial digital audio jack, or vice versa. Both the chrominance (color) and luminance (intensity) components of the video signal are transmitted using a single cable. See Figure 10.

Figure 10 – Composite Video

S-video, or "separate" video, transmits the chrominance and luminance components using separate wires contained within a single cable. The plug on an S-video cable contains four metal pins, plus a plastic guide pin. Be careful to line up the plug correctly when you insert it into the jack on the receiver, source or video display. See Figure 11.

Figure 11 – S-Video

Component video separates the video signal into three components – one luminance ("Y") and two sub-sampled color signals ("Pb" and "Pr") – that are transmitted using three separate cables. The "Y" cable is color-coded green, the "Pb" cable is colored blue and the "Pr" cable is colored red. See Figure 12.

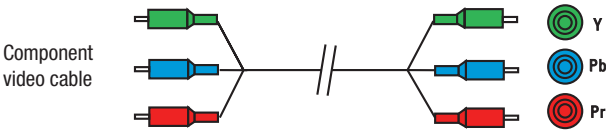

Figure 12 – Component Video

If it's available on your video display, an HDMI connection is recommended as the best quality connection, followed by component video, S-video and then composite video.

NOTES:

- Copy-protected sources are not available at the Component Video Monitor Outputs.
- Standard and high-definition analog video signals are upscaled to 1080i resolution for the Component Video Monitor Outputs. For improved video performance, consider upgrading to an HDMI-capable video display with 1080p resolution.

Antennas

The AVR 254 uses separate terminals for the included FM and AM antennas that provide proper reception for the tuner.

The FM antenna uses a 75-ohm F-connector. See Figure 13.

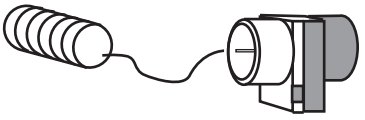

Figure 13 – FM Antenna

The AM loop antenna needs to be assembled. Connect the two leads to the spring terminals on the receiver. As AM antenna leads have no polarity, it doesn't matter which of the two terminals is used for either lead. See Figure 14.

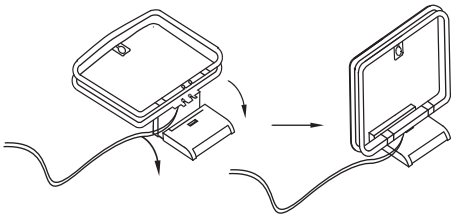

Figure 14 – AM Antenna

To enjoy XM satellite radio, purchase an XM antenna module designed for use with XM Ready devices and a subscription to the XM service. We recommend the XM Mini Tuner and Home Dock Bundle, available at www.xmradio.com. The older Connect and Play module is also compatible with the AVR 254, but it may no longer be available in your area.

An XM Ready-compatible module uses the special connector on the AVR 254's rear panel that allows you to use the AVR's tuner, including its 40 preset station locations and remote control. Although you may use a module with standard audio connections, which may be indicated for "car and home use," you will not be able to enjoy the AVR 254's ease of control.

RS-232 Serial Port

The RS-232 serial port on the AVR 254 is used only for software upgrades. If we release an upgrade for the receiver's operating system at some time in the future, it may be downloaded to the AVR using this port. Complete instructions will be provided at that time.

INSTALLATION

You are now ready to connect the various components to the receiver. Before beginning, turn off all components, including the AVR 254, and unplug their power cords. **Don't plug in any of the power cords until you have finished making all of your connections.**

Remember that the receiver generates heat while it is on. Select a location that leaves several inches of space on all sides of the receiver. Avoid completely enclosing the receiver inside an unventilated cabinet. It is preferable to place components on separate shelves rather than stacking them directly on top of the receiver. Some surface finishes are delicate. Try to select a location with a sturdy surface finish.

Step One – Connect the Speakers

If you have not yet done so, place your speakers in the listening room, as described in the Speaker Placement section above.

Connect the center, front left, front right, surround left, surround right, surround back left and surround back right loudspeakers to the corresponding speaker terminals on the AVR 254. See Figure 17. Maintain the proper polarity by always connecting the positive and negative terminals on each speaker to the positive and negative terminals on the receiver. Use the Connection Color Guide on page 18 as a reference.

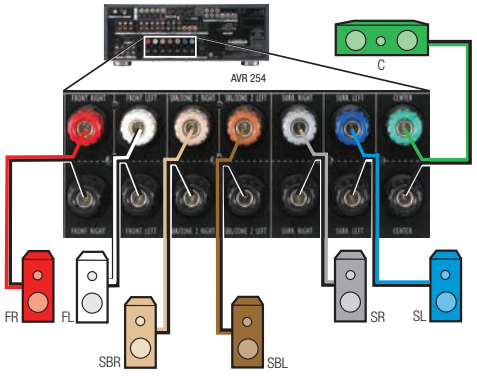

Figure 17 – Speaker Connections

NOTE: If you only have one surround back speaker, wait until after you have run the EzSet/EQ process in the Initial Setup section before connecting it to the Surround Back Left speaker outputs.

Step Two – Connect the Subwoofer

Connect the Subwoofer Output on the AVR 254 to the line-level input on your subwoofer. See Figure 18. Consult the manufacturer's guide for the subwoofer for additional information.

When the system has two subwoofers for a 7.2-channel system, use a Y-Adapter (not included) with one male RCA plug and two female RCA jacks. Connect the male plug to the Subwoofer Output, and connect each female jack to a cable that is then plugged into the line-level input on each subwoofer.

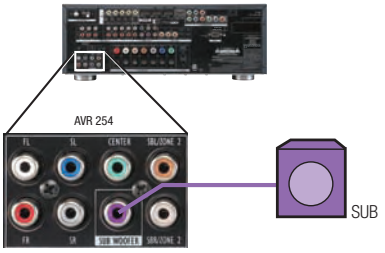

Figure 18 – Subwoofer Connection

Step Three – Connect the Antennas

Connect the FM and AM antennas to their terminals. If you have purchased an XM antenna module designed for connection to an XM Ready device, connect it now. To enjoy XM Radio, remember to purchase a subscription and activate your antenna module. More information is available at www.xmradio.com. See Figure 19.

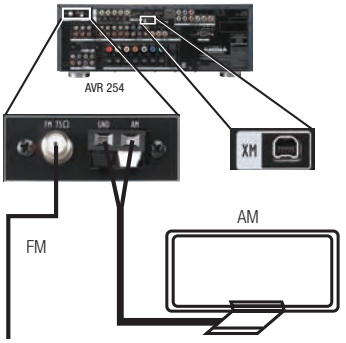

Figure 19 – Antenna Connections

Step Four – Connect the Source Components

A source is a device where the audio and video signals originate. Some sources, such as CD players, only offer audio, while sources used for watching movies or broadcast-television programming deliver a video signal as well.

Referring to the photograph of the AVR 254 remote control on page 15, there is a section of 7 buttons near the top of the remote designated "Source Selectors": Cable/Sat, DVD, Media Server, Radio, TV, Game and AUX. Each of these buttons corresponds to a "source input". The AVR 254's flexible design allows you to use almost any combination of audio and video connections for each source device. The goal of Step Four of the Installation is to match up each of your source devices, e.g., DVD player and cable television box, with the correct connectors on the AVR 254.

You may connect a source device to any appropriate input connectors. Note which audio and video inputs are used for each device in Table A5 in the appendix. Table A2 indicates the default input-connection assignments, any of which may be changed to match the actual connections in your system.

The precise connections to be made depend on the capabilities of the source device and your video display (TV). Select the best audio and video connections for each source. The types of connections are listed in order of preference:

HDMI Connections

- Choose the HDMI connection if it's available on your source device and your TV. A HDMI connection carries both digital audio and video, enabling a single-cable connection from the source device to the AVR. Except as noted below, no other audio or video connections are required.

NOTE: If your DVD-Audio, SACD, Blu-ray Disc or HD-DVD player is not capable of outputting multichannel digital audio through its HDMI output, make additional 6-/8-channel analog audio connections.

Audio Connections (for non-HDMI sources)

- Choose one digital audio connection: Optical or Coaxial
- Optional, or where digital audio is not available: Analog audio for making recordings for personal use or as a backup. Analog audio is required for older analog sources that don't have digital audio outputs, such as cassette decks.

Video Connections (for non-HDMI sources)

(choose only one, and make sure that type is available on your TV)

- Component video
- Composite video
- S-video

NOTES:
- If the video display is equipped with a DVI digital video input, make sure it is also HDCP-compliant (High-Bandwidth Digital Content Protection) to display copy-protected materials.
- If the source or video display has a DVI input, use an HDMI-to-DVI adapter (not included), and make separate audio connections.

Connect a DVD, SACD, Blu-ray Disc or HD-DVD Player

HDMI Video: If the DVD player and the TV both have an HDMI connector, connect the player as follows (see Figure 20):

- Connect the DVD player's HDMI output to the HDMI 1, 2 or 3 Input on the AVR.

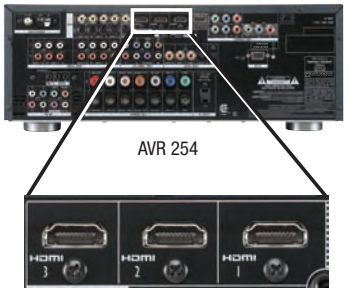

Figure 20 – Connecting An HDMI-Equipped Disc Player

If the player is capable of playing multichannel discs, including DVD-Audio, SACD, Blu-ray Disc and HD-DVD, but it is not capable of outputting the multichannel audio through its HDMI output, make the following additional connections (see Figure 21):

- Connect the DVD player's 6-/8-channel analog audio outputs to the 6-/8-Channel Analog Audio Inputs on the AVR.

Figure 21 – Connecting a Multichannel Audio Player

Component Video: If the DVD player or the TV does not have an HDMI connector, but they both have component video connectors, connect the player as follows (see Figure 22):

- Connect the DVD player's component video output to the Component Video 1 or 2 Input on the AVR.
- Connect one of the DVD player's digital audio outputs to one of the Coaxial or Optical inputs on the AVR.

Figure 22 – Connecting a Component-Video-Equipped Disc Player

If the player is capable of playing multichannel discs, including DVD-Audio, SACD, Blu-ray Disc and HD-DVD, make the following additional connection (see Figure 21):

- Connect the DVD player's 6-/8-channel analog audio outputs to the 6-/8-Channel Analog Audio Inputs on the AVR.

Composite/S-Video: If the best video connection common to both the DVD player and the TV is either S-video or composite video, follow these steps (see Figure 23):

- Connect the DVD player's S-video or composite video output (use one connection only) to the Video 1, 2 or 3 Input on the AVR. You may also use the Video 4 Composite or S-video Input located on the AVR's front panel (see Figure 31).

INSTALLATION

- Connect the DVD player's digital audio output to one of the Coaxial or Optical inputs on the AVR.

If the player is capable of playing multichannel discs, including DVD-Audio, SACD, Blu-ray Disc and HD-DVD, make the following additional connection (see Figure 23):

- Connect the DVD player's 6-/8-channel analog audio outputs to the 6-/8-Channel Analog Audio Inputs on the AVR.

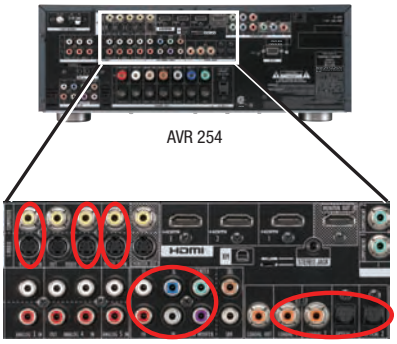

Figure 23 – Connecting a Composite- or S-Video-Equipped Disc Player

NOTES:

- Refer to Table A2 in the appendix for the default audio and video input assignments for each source. Using the default connections, if appropriate for your system, may save a few steps during Initial Setup. However, thanks to the AVR 254's flexibility, you may assign any audio and any video input to any source, as long as the assignments match the physical connections.
- If you wish to make recordings from a DVD, use an S-video or composite video input, and an Analog Audio input in addition to any other connections. The AVR cannot make recordings from HDMI or component video sources, and digital audio sources may only be recorded in two channels.

Connect an Audio/Video Recorder (PVD, DVR or TiVo®)

HDMI Video: If the recorder and the TV both have an HDMI connector, connect the recorder as follows (see Figure 24):

- Connect the recorder's HDMI output to the HDMI 1, 2 or 3 Input on the AVR. This connection is for playback only, as the AVR cannot make recordings from HDMI sources.
- To make recordings, follow the instructions below for Composite/S-video recorders.

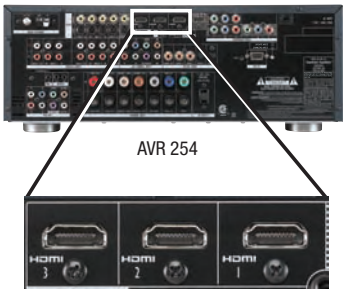

Figure 24 – Connecting an HDMI-Equipped Recorder

Component Video: If the recorder or the TV does not have an HDMI connector, but they both have component video connectors, connect the recorder as follows (see Figure 25):

- Connect the recorder's component video output to the Component Video 1 or 2 Input on the AVR. This connection is for playback only, as the AVR cannot make recordings from component video sources.
- Connect the recorder's digital audio output to a Coaxial or Optical Input on the AVR (if available).
- Follow the instructions in the Composite/S-Video section for making connections required for recordings.

Figure 25 – Connecting a Component-Video-Equipped Recorder

Composite/S-Video: If the best video connection common to both the recorder and the TV is either S-video or composite video, or to make recordings, follow these steps, using only one type of video connection throughout (see Figure 26):

- Connect the recorder's S-video/composite video output to the Video 2 S-Video/Composite Video Input on the AVR.
- Connect the recorder's S-video/composite video input to the Video 2 S-Video/Composite Video Output on the AVR.
- Connect the recorder's analog audio outputs to the Analog 4 Audio Inputs on the AVR.
- Connect the recorder's analog audio inputs to the Analog 4 Audio Outputs on the AVR.

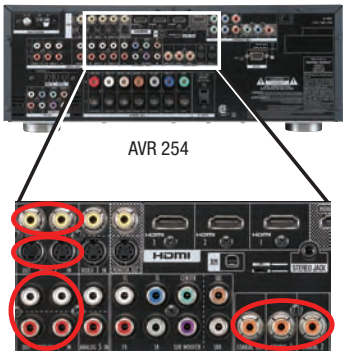

Figure 26 – Connecting a Composite or S-Video Recorder

- To make two-channel digital audio recordings, connect the recorder's digital audio output to one of the Optical or Coaxial Inputs, and connect the AVR's Coaxial Digital Audio Output to the recorder's coaxial input. The AVR will convert an optical digital audio input signal to the proper format for recording via the Coaxial Digital Audio Output. See Figure 26.

Connect a Cable TV, Satellite, HDTV or Other Set-Top Box for Broadcast Television

NOTE: If the TV has a digital audio output, connect it to one of the digital audio inputs. If you use a direct cable connection to your TV, or an antenna connection with the TV's internal tuner, connect either the TV's digital audio output (if available) or its analog audio outputs to the AVR. See Step Five for information on connecting the receiver's video monitor outputs to the television.

HDMI Video: If the set-top box and the TV both have an HDMI connector, connect the set-top box as follows (see Figure 24):

- Connect the set-top's HDMI output to the HDMI 1, 2 or 3 Input on the AVR.

Component Video: If the set-top box or the TV does not have an HDMI connector, but they both have component video connectors, connect the set-top box as follows (see Figure 25):

- Connect the set-top's component video output to the Component Video 1 or 2 Input on the AVR (if available).
- Connect the set-top's digital audio output to one of the Coaxial or Optical Inputs on the AVR (if available).

Composite S/Video: If the best video connection common to both the set-top box and the TV is either S-video or composite video, follow these steps (see Figure 27):

- Connect the set-top's S-video or composite video output (use one connection only) to the corresponding Video 1, 2 or 3 Input on the AVR.
- Connect the set-top's digital audio output to one of the Coaxial or Optical Inputs on the AVR (if available). For fully analog set-top boxes, connect the box's analog audio outputs to the AVR's Analog 1, 2, 3, 4 or 5 Audio Inputs.

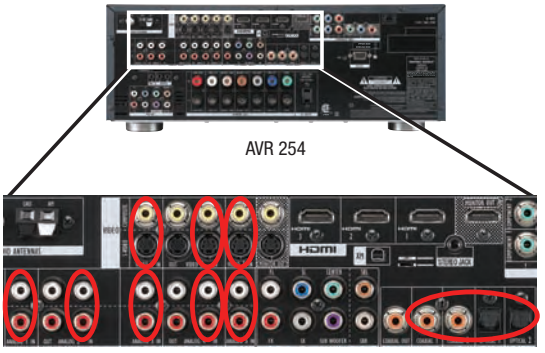

Figure 27 – Connecting a Composite- or S-Video-Equipped Set-Top Box

Connect a CD Player or Any Audio-Only Device

If the CD player or other component has a digital audio output, connect it to any available digital audio input on the AVR. If not, connect the CD player's left and right analog audio outputs to the Analog 1 or 2 Audio Inputs. No video connection is required, although the AVR will display any signal at the video input assigned to the same source as the audio inputs. See Figure 28.

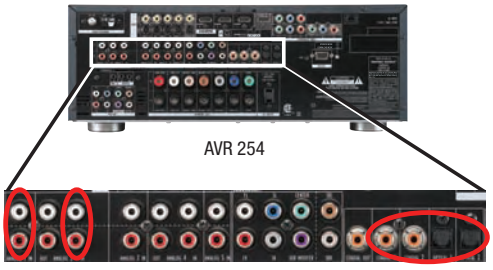

Figure 28 – Connecting a CD or Audio-Only Source

NOTES:

- A turntable may only be connected to the AVR if it is equipped with an internal phono preamp, or if you supply an external phono preamp, available at some audio specialty stores or through the Harman Kardon Parts Dept. You may then connect it to any set of analog audio inputs.
- Although there is no official source on the AVR 254 named CD, Phono or Audio, you may assign the audio device to an available source, such as TV (if the Cable/Sat source is in use for broadcast television), Game or AUX. See the Initial Setup section for more details on source assignment.

Connect a Tape Deck or Any Audio-Only Recorder

If the recorder has digital audio inputs and outputs, connect either its coaxial or optical digital audio output (not both) to the corresponding available input on the AVR, and connect the AVR's Coaxial Digital Audio Output to the recorder's coaxial digital audio input.

INSTALLATION

To make analog audio recordings, connect the recorder's left and right analog audio outputs to the Analog 2 Audio Inputs on the AVR, and the recorder's analog audio inputs to the AVR's Analog 2 Audio Outputs.

No video connection is required, although the AVR will display any signal at the video input assigned to the same source as the Analog 2 Audio Inputs. See Figure 29.

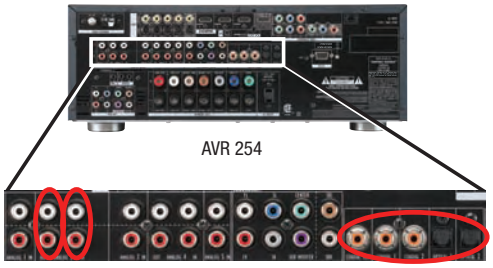

Figure 29 – Connecting an Audio Recorder

Connect a Portable Audio Player

For audio-only playback from a portable CD player, cassette deck, MP3 player or other device equipped with a 1/8-inch headphone jack, use a stereo 1/8-inch mini-plug interconnect (not included) to connect the device's headphone jack to the Stereo Jack on the AVR. Use the device's own controls to operate it. See Figure 30.

Figure 30 – Connecting a Portable Audio Player

Alternatively, use an interconnect with a stereo 1/8-inch mini-plug at one end and two RCA plugs at the other end to connect the player to the Audio Inputs on the AVR's front panel. See Figure 31.

Connecting a Game Console, Camera or Other Device

If a device will only be connected temporarily, you may use the audio/video inputs on the front panel. When not in use, place the supplied covers over the jacks for a cleaner appearance by snapping the covers in place. To remove the covers, gently press on the left side of each cover so that it pivots out.

Video Components: Install video components, e.g., game consoles and camcorders, as follows (see Figure 31):

- Connect the component's S-video or composite video output (use only one connection) to the corresponding front-panel Input on the AVR.
- Connect the component's optical or coaxial digital audio output to either the Optical or Coaxial Input on the front panel (if available). For fully analog devices, connect the device's analog audio outputs to the AVR's front-panel Analog Audio Inputs.

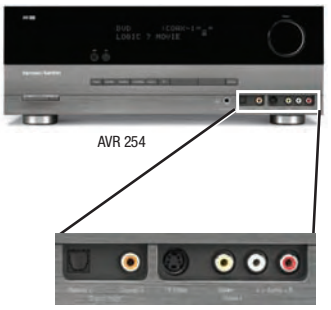

Figure 31 – Connecting a Device to the Front-Panel Inputs

Audio Components: Connect audio-only devices, such as CD players, to either the Coaxial or Optical Digital Audio Inputs, or the Analog Audio Inputs (see Figure 31).

NOTE: If your video devices are equipped with HDMI or component video outputs, you may connect them to any available audio and video input on the AVR.

Step Five – Connect the Video Display

IMPORTANT NOTE: Do not connect any video output on the video display (TV) to any video input on the AVR. Doing so will cause undesirable video interference.

HDMI Video: If the display has an HDMI input, connect the HDMI Monitor Output to the display (see Figure 32). Thanks to the AVR 254's sophisticated video processing and upscaling capabilities, no other video connections are required from the AVR to the video display. Analog video sources (composite, S-video and component) are converted to the HDMI format and upscaled to as much as 1080p resolution, depending on the display's capabilities. Proceed to Step Six.

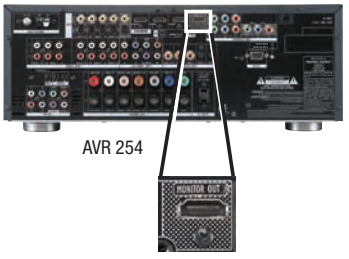

Figure 32 – HDMI Monitor Output

Component Video: If the display does not have HDMI inputs, but does have component video inputs, connect the Component Video Monitor Outputs to the display (see Figure 33). As with HDMI connections, the AVR 254 is capable of converting composite and S-video sources to the component video format, while upscaling the resolution to as high as 1080i, depending on the display's capabilities. Unlike HDMI connections, component video connections do not enable the AVR 254 to detect the display's capabilities and the appropriate resolution must be selected manually, as described in the Initial Setup section.

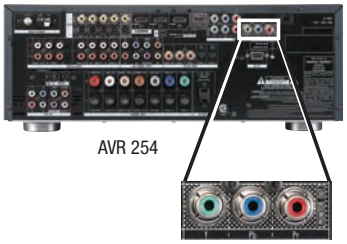

Figure 33 – Component Video Monitor Outputs

Composite/S-Video: If the video display does not have HDMI or component video inputs, connect the corresponding composite or S-video Monitor Output to the display. If available, S-video is preferred over composite video, and if used, the AVR 254 will convert composite video sources to S-video. See Figure 34.

Figure 34 – Composite and S-Video Monitor Outputs

Consult the manual for your TV to make sure you understand how to select the correct video input.

Step Six – Plug in AC Power

Having made all of your wiring connections, it is now time to plug each component's AC power cord into a working outlet.

You may plug one device into the AC Switched Accessory Outlet on the rear of the AVR 254. See Figure 35. Make sure this device draws no more than 50 watts. The device should have its mechanical or master power switch turned on, and it will power on any time the AVR 254 is turned on. If the device has a clock or must always be on, do not plug it into this outlet.

Figure 35 – Switched AC Accessory Outlet

Before plugging the AVR 254's AC Power Cord into an electrical outlet, make sure that the Master Power Switch on the front panel is popped out so that the word OFF appears on its top. Gently press the button to turn the switch off. This will prevent the possibility of damaging the AVR in case of a transient power surge.

Step Seven – Insert Batteries in Remote

The AVR 254 remote control uses four AAA batteries, which are included.

To remove the battery cover located on the back of the remote, squeeze the tab and lift the cover.

Insert the batteries, as shown in Figure 36, making sure to observe the correct polarity.

Figure 36 – Remote Battery Compartment

When using the remote, remember to point the lens toward the front panel of the AVR 254. Make sure no objects, such as furniture, are blocking the remote's path to the receiver. Bright lights, fluorescent lights and plasma video displays may interfere with the remote's functioning. The remote has a range of about 20 feet, depending on the lighting conditions. It may be used at an angle of up to 30 degrees to either side of the AVR.

If the remote seems to operate intermittently, or if pressing a button on the remote does not cause the AVR Settings Button or one of the Source Selectors to light up, then make sure the batteries have been inserted correctly, or replace all three batteries with fresh ones.

Step Eight – Program Sources Into the Remote

The AVR 254 remote not only is capable of controlling the receiver, but it may also be programmed to control many brands and models of DVD players, cable boxes, satellite receivers, the Harman Kardon DMC 1000 digital media center and TVs.

It may help to think of the remote as a book with pages. Each "page" represents the button functions for a different device. In order to access the functions for a particular device, first turn to its page; that is, switch the remote's device mode. This is done by pressing the AVR Settings Button to access the codes that control the receiver, or the Source Selector Buttons to access the codes for the devices programmed into the remote.

The AVR 254's remote is factory-programmed to control many Harman Kardon DVD players. If you have other source devices in your system, follow these steps to program the correct codes into the remote.

1. Using the codes in Tables A14 – A24 of the Appendix, look up the product type (e.g., DVD, cable TV box) and the brand name of your source. The number(s) listed is/are potential candidates for the correct code set for your particular device.

NOTE: The AUX Source Selector is used for the CD, HDTV, PVD recorder, TIVO and VCR device types. Select the brand code

INSTALLATION

from the appendix table corresponding to the device and program it into the AUX Source Selector. Similarly, the CBL/SAT Source Selector is used for either a cable or satellite television set-top box. The first digit of the product code indicates the device type.

2. Turn on your source device.

3. This step places the remote in program mode. Refer to Figure 37. Press and hold the Source Selector. The button will turn red, then go dark. Continue holding it, and when it turns red again, release the button; the remote is now in program mode. Follow the directions in Step 4, below.

Figure 37 – Source Selectors

Optional: To reassign a device type from one Source Selector to another Source Selector not being used, e.g. if there are two DVD players in the system, press the Source Selector for the new device type now. For example, to reassign the Cable/Sat Source Selector to operate a DVD player, first press and hold the Cable/Sat Button, and then press the DVD Button.

4. Enter a code from Step 1, above.

   a) If the device turns off, press the Source Selector again to accept the code; it will flash. The remote will exit Program mode.

   b) If the device does not turn off, try entering another code. If you run out of codes, you may search through all of the codes in the remote's library for that product type by pressing the ▲ or ▼ Button repeatedly until the device turns off. When the device turns off, enter the code by pressing the Source Selector, which will flash. The remote then exits Program mode.

5. Once you have programmed a code, it's a good idea to try using some other functions to control the device. Sometimes, manufacturers use the same Power code for several different models, while other codes will vary. You may wish to repeat this process until you've programmed a satisfactory code set that operates most of the functions you frequently use.

6. Find out which code number you have programmed by pressing and holding the Source Selector to enter the Program mode. Then press the OK Button, and the Source Selector will flash in the code sequence. One flash represents "1", two flashes for "2", and so forth. A series of many fast flashes represents "0". Record the codes programmed for each device in Table A9 in the appendix.

If you are unable to locate a code set that correctly operates your source device, it will not be possible to use the AVR remote to control that device. However, you may still connect the source to the AVR 254 and operate it using the device's original remote control.

Most of the button labels on the remote describe the button's function when used to control the AVR 254. However, the button may perform a very different function when used to control another device. Refer to the Remote Control Function List, Table A13 in the Appendix, for a list of each button's functions with the various product types.

If you wish, you may program Activities, which are preprogrammed code sequences that execute many code commands with a single button press. You may also program "punch-through" codes, which allow the remote to operate the channel or transport controls of another device without having to switch the remote's device mode. See page 53 for instructions on these advanced programming functions.

Step Nine – Remote IR Inputs and Output (Optional)

The AVR 254 is equipped with a Remote IR Input, a Zone 2 Input and a Remote IR Output to facilitate use of your system with a remote control in a variety of situations. See Figure 38.

Figure 38 – IR Inputs and Outputs

When the AVR 254 is placed in such a way that aiming the remote at the front-panel IR sensor is difficult, such as inside a cabinet or facing away from the listener, you may connect an external IR receiver, such as the optional Harman Kardon HE 1000, to the Remote IR Input jack. When you are using the AVR 254 in multizone mode, you may connect an optional IR receiver, keypad or other control device to the Zone 2 IR Input for remote control of the AVR 254 (and any sources connected to the AVR's Remote IR Output) from the remote zone. Any signals transmitted through the Zone 2 IR Input will only control source selection and volume for the remote zone. If a source device is being shared with the main listening area, then any control commands issued to that source will also affect the main room.

If any of your source devices are equipped with a compatible Remote IR Input, use a 1/8" mini-plug interconnect cable (not included) to connect the AVR's Remote IR Output to the source device's Remote IR Input, which will pass any applicable remote signals transmitted through the AVR to the source device. This enables you to control your sources even when the AVR itself is controlled via an external IR receiver.

Check with the manufacturer of the source device for more information on the type of IR signal expected. The AVR 254 will output a "stripped carrier" IR signal through the Remote IR Output.

To control more than one source device using the Remote IR Output, connect all sources in "daisy chain" fashion, with the AVR's Remote IR Output connected to the first device's Remote IR Input, the second device's Remote IR Output connected to the next device's Remote IR Input, and so forth.

Step Ten – Install a Multizone System (Optional)

The AVR 254 offers several methods of distributing music to other listening areas in your home. A multizone system is not required to enjoy the home theater experience. If you prefer not to install a multizone system at this time, skip to Step Eleven to turn on the AVR 254 and configure it.

IMPORTANT SAFETY NOTE: Installing a multizone system typically requires running various cables inside walls. Always comply with the appropriate safety codes when installing concealed wiring. The AVR 254's multizone connections should be installed per the requirements of all applicable state and local building codes, as well as NEC (National Electrical Code) requirements. Failure to do so may present a potential safety hazard. If you have any doubt about your ability to work with electrical and telecommunications wiring, you are advised to hire a licensed electrician or custom installer to install the multizone system.

Multizone operation uses the Surround Back/Zone 2 amplifier channels, whether you connect the remote speakers directly to the speaker outputs, or if you connect an optional external amplifier to the preamp outputs. This limits the system in the main listening room to 5.1 channels, which means you cannot listen to 6.1- or 7.1-channel programs in the main room.

Select one or both:

1. Connect the remote room's speakers directly to the Surround Back/Zone 2 Speaker Outputs. See Figure 39.

Figure 39 – Surround Back/Zone 2 Speaker Outputs

If you prefer not to purchase an external amplifier to power a pair of remote speakers, you may reassign the AVR 254's Surround Back amplifier channels to power the speakers.

2. Connect an external amplifier to the Surround Back/Multiroom Preamp Outputs. See Figure 40.

Figure 40 – Surround Back/Multiroom Preamp Outputs

This method requires you to provide an additional component: the amplifier. However, this method may be used to increase the number of remote rooms in the system when you are also using the Surround Back/Zone 2 Speaker Outputs.

Place the amplifier in the same room as the AVR 254 so that a shorter length of interconnect cable is used with a long run of speaker wire to the remote room. This is better than placing the amplifier in the remote room, which necessitates a long run of interconnect cable that would then be subject to signal degradation.

In addition to the audio signal, you may connect an IR control device to the AVR 254's Zone IR Input so that listeners in the remote room may turn the multizone system on or off, select a source input, control the source device connected to that input and adjust the volume in the remote zone.

NOTE: Only analog audio sources are available to the multizone system.

Step Eleven – Turn On the AVR 254

Two steps are required the first time you turn on the AVR 254.

1. Gently press the Master Power Switch until the word OFF is no longer visible. The Power Indicator above the two power switches should light up in amber, indicating that the AVR is in Standby mode and is ready to be turned on. See Figure 41. Normally, you may leave the Master Power Switch in the ON position, even when the receiver is not being used.

Figure 41 – Power Switches

2. There are several ways in which the AVR 254 may be turned on from Standby mode.

   a) Press the Standby/On Switch on the front panel. See Figure 41.

   b) Using the remote, press the AVR Power On Button or any of the Source Selectors. See Figure 42.

INSTALLATION

Figure 42 – AVR Power On and Source Selectors

NOTES:

- Any time you press one of the Source Selectors on the remote (i.e., Cable/Sat, DVD, Media Server, Radio, TV, Game or AUX), the remote will switch modes to transmit the codes programmed to operate that device. To control the receiver, press the AVR Settings Button to return the remote to AVR mode. Some AVR functions are available in all device modes, and you don't have to press the AVR Settings Button first to use them: Volume Controls (including Mute), Audio Effects, Video Modes, Surround Modes, AVR Settings, Info Settings, Sleep Settings and AVR Power On and Off.

- If you are not using the AVR's HDMI Output with your display, you may not see a picture the first time you turn on the AVR 254, or after a system reset. To correct this, press the front-panel Resolution Button to display the current video output resolution. Use the ▲ Button to change it to 480i, which should be compatible with all video displays, then press the OK Button to select the new setting. You will be prompted to accept or cancel the change; the CANCEL message will appear on the front panel. Press the ▼ Button to view the ACCEPT option, and then press the OK Button to complete the change to the output resolution. Follow the directions in the Initial Setup section to configure the AVR to function correctly with your display and other components.

OPERATION

Now that you have installed your system components and completed a basic configuration of your receiver, you are ready to begin enjoying your home theater system.

Turning On the AVR 254

Gently press the Master Power Switch until the word OFF is no longer visible. The Power Indicator above the two power switches should light up in amber. This indicates that the AVR is in Standby mode and is ready to be turned on. Normally, you may leave the Master Power Switch in the ON position, even when the receiver is not being used. See Figure 41.

There are several ways in which the AVR 254 may be turned on:

a) Press the Standby/On Switch on the front panel. See Figure 41.

b) Using the remote, press the AVR Power On Button or any of the Source Selectors. See Figure 42.

To turn the receiver off, press either the Standby/On Switch on the front panel, or press the AVR Power Off Button on the remote. Unless the receiver will not be used for an extended period of time (for example, when are on vacation), it is not necessary to turn off the Master Power Switch. When the Master Power Switch is turned off, any settings you have programmed, including system configuration and preset radio stations, will be preserved for up to four weeks.

IMPORTANT NOTE: If the PROTECT message ever appears in the Message Display, turn off the AVR and unplug it. Check all speaker wires for a possible short. If none is found, bring the unit to an authorized Harman Kardon service center for inspection and repair before using it again.

Volume Control

The volume may be adjusted either by turning the knob on the front panel (clockwise to increase volume or counterclockwise to decrease volume), or by pressing the Volume Control on the remote. See Figure 52. The volume is displayed as a negative number of decibels (dB) below the 0dB reference point.

Unlike the volume controls on some other products, 0dB is the maximum volume for the AVR 254. Although it's physically possible to turn the volume to a higher level, doing so may damage your hearing and your speakers. For certain more dynamic audio materials, even 0dB may be too high, allowing for damage to equipment. We urge caution with regard to volume levels.

You may change the volume level display from the default decibel scale to a 0-to-100 scale by adjusting the Volume Units setting in the System Settings menu, as described on page 52.

Figure 52 – Volume Controls

Mute Function

To temporarily mute all speakers and the headphones, press the Mute Button on the remote. See Figure 52. Any recording in progress will not be affected. The MUTE message will appear in the display as a reminder. To restore normal audio, either press the Mute Button again, or adjust the volume. Turning off the AVR will also end muting.

Sleep Timer

You may program the AVR to play for up to 90 minutes and then turn off automatically using the sleep timer.

Press the Sleep Settings Button on the remote, and the time until turn-off will be displayed. See Figure 53. Each additional press of the Sleep Button will increase the time until turn-off by 10 minutes, up to a maximum of 90 minutes, then the SLEEP OFF setting appears, which disables the sleep timer.

Figure 53 – Sleep Settings Button

When the sleep timer has been set, the front-panel display will automatically dim to half-brightness. If you press any button on the remote or front panel, the display will return to full-brightness. The display will dim again several seconds after your last command.

If you press the Sleep Button after the timer has been set, the remaining time until turn-off will be displayed. You may press the Sleep Button to change the time until turn-off.

Audio Effects

Depending on your preferences or the specific characteristics of your listening room, you may wish to adjust some of the audio settings, such as tone controls, to improve performance. Access these settings from the Audio Effects submenu, as described in the Advanced Functions section.

It is not necessary to adjust the Audio Effects settings to enjoy your new AVR. We recommend leaving the settings at their default values until you are more familiar with your system.

Video Modes

The settings in the Video Modes menu are used to fine-tune the picture if necessary after making all adjustments on the video display. It is recommended that you leave the settings at their defaults. See the Advanced Functions section for detailed information.

Headphones

Plug the 1/4" plug on a pair of headphones into the headphone jack on the front of the receiver for private listening. See Figure 54.

The DOLBY H:BYPASS message indicates that Dolby Headphone surround processing is in the default bypass mode, which delivers a conventional 2-channel signal to the headphones.

Figure 54 – Headphone Jack

Press the Surround Modes Button on the front panel or the remote, to switch to Dolby Headphone virtual surround processing, indicated by the DOLBY H:DH message. Dolby Headphone delivers an enhanced sound field that emulates a 5.1-channel speaker system. No other surround modes are available for the headphones.

Source Selection

Press the front-panel Source List Button to scroll through the sources. Each press of the button scrolls down the list that appears in the display and on screen. See Figure 55.

Figure 55 – Source List Button

For direct access to any source, press its Source Selector on the remote.

The AVR 254 will switch to the audio and video inputs assigned to the source.

The source name will appear in the upper line of the front-panel display. If you retitled the source, the new title will appear. The audio and video inputs assigned to the source will also appear briefly. The surround mode will be displayed on the lower line.

Any other settings you adjusted in the Setup Source menu will also be selected. You may view these settings in the Source Info menu at any time by pressing the Info Settings Button.

VIDEO TROUBLESHOOTING TIPS:
If a video source is playing and there is no picture:

- Check that you have selected the source to which the video input was assigned.
- Check the wires for a loose or incorrect connection.
- Check that you have selected the correct video input on the display device (TV).
- Try pressing the Resolution Button on the front panel repeatedly until the correct video output resolution is selected and a picture appears. You will be prompted to accept or cancel the resolution change, as the CANCEL message will appear on the front panel. Press the ▼ Button to view the ACCEPT option, and then press the OK Button to complete the change to the output resolution.

Additional tips for systems using HDMI:

- Turn off all devices (including the TV, AVR and any source components).
- Unplug the HDMI cables starting with the cable between the TV and AVR, and continuing with the cables between the AVR and each source device.
- Carefully reconnect the cables from the source devices to the AVR, and connect the cable from the AVR to the TV last.
- Turn on the devices in this order: TV, then AVR, then source devices.

Using the Tuner

To select the AVR 254's built-in tuner:

1. Press the Source List Button on the front panel repeatedly until the desired tuner band is selected, or use the ▲/▼ Buttons to scroll through the source list.
2. Press the Radio Source Selector on the remote. Press this button again to switch bands (AM, FM or XM).

A screen similar to the one shown in Figure 56 will appear, with the band indicated in the middle of the screen. (The XM band uses a slightly different screen.)

Figure 56 – FM Radio

Use the ▲/▼ Buttons to tune a station (or channel for XM Radio). The frequencies will be displayed in the front panel and graphically on screen.

The AVR defaults to automatic tuning, meaning each press of the ▲/▼ Buttons scans through all frequencies until a station with acceptable signal strength is found. To switch to manual tuning, in which each press of the ▲/▼ Buttons steps through a single frequency increment (0.1MHz for FM, or 10kHz for AM), press the Menu Button. The Radio Modes line will be highlighted, and each press of the OK Button toggles between automatic and manual tuning modes.

When an FM station has been tuned, toggling the radio mode switches between stereo and monaural play, which may improve reception of weaker stations.

A total of 30 stations (AM and FM together) may be stored as presets. When the desired station has been tuned, press the OK Button, and two dashes will flash in the front-panel display. Use the Alphanumeric Keys to enter the desired preset number.

OPERATION

To tune a preset station, press the ◀/▶ Buttons or the Channel Control, or press the Menu Button to view the list of programmed presets and scroll to the desired selection. Press the OK Button to tune the station. You may also enter the preset number using the Numeric Keys. For presets 10 through 30 press 0 before the preset number. For example, to enter preset 21, press 0-2-1.

XM Radio Operation

XM Radio is a satellite-delivered service that offers hundreds of program channels, as well as local traffic and weather information for select cities. The AVR 254 is "XM Ready," which means that it is able to receive the XM service when a user-supplied XM antenna module is connected and the service activated.

Select an antenna module designated for XM Ready audio components. An XM Ready-compatible module uses the special connector on the AVR 254's rear panel that allows you to use the AVR's tuner, including its 40 preset station locations and remote control. Although you may use a module with standard audio connections, which may be indicated for "car and home use," you will not be able to enjoy the AVR 254's ease of control.

The XM Mini-Tuner and Home Dock (Models CNP-2000 and CNP-2000H; both pieces are required) are compatible with the AVR 254. The older Audiovox® CNP 1000 "Connect and Play" module for home audio use is also compatible, but has been discontinued and may no longer be available. Additional modules may become available in the future. Modules produced for automotive, or "mobile," use are not compatible with the AVR 254, although if they have standard analog or digital audio outputs, they may be connected to a compatible input and operated using their own controls.

NOTE: To listen to XM Radio using the AVR 254, you will need to purchase an XM antenna module and subscription, and activate your module. XM service is not available in Alaska or Hawaii. Visit the XM Radio Web site at www.xmradio.com for more information.

Plug the module into the XM Antenna Jack on the rear of the AVR 254. Place the antenna module so that it has a clear view through a south-facing window in order to obtain reception from the XM satellite.

Select XM Radio as the source in one of these ways:

1. Press the Source List Button on the front panel repeatedly until XM Radio is selected, or use the ▲/▼ Buttons to scroll through the source list.
2. Press the Radio Source Selector on the remote repeatedly until XM Radio is selected..

You should be able to tune in Channel 1, the Preview Channel, to confirm that your equipment is ready for activation. There are four ways to tune an XM Radio channel:

1. Use the ▲/▼ Buttons to scan through the channel numbers.
2. Use the ◀/▶ Buttons to jump to the next category, and then use the ▲/▼ Buttons to scan through the channel numbers within the category.
3. After you have programmed presets, directly enter the preset number (1 through 40) using the Alphanumeric Keys. For single-digit positions, enter a "0" before the number.
4. Press the Menu Button to search for a channel by preset, category, all channels (the default) or direct entry.

When you are able to hear Channel 1, you are ready to activate your module. If you don't hear Channel 1, make sure the module's plug is firmly seated in the XM Antenna jack, and that the module is near a south-facing window. Try unfolding the module and rotating it to obtain reception. You may need to purchase an extension cable, available on the XM Radio site, to ensure that the module is near the window.

Tune to Channel 0 for a display of your antenna module's Radio ID number, required for activation.

The current channel number and preset location will appear in the upper line of the Message Display, and the search mode (all channels, category) will appear in the lower line. Three signal-strength bars will appear to the right of the channel number and preset location to indicate signal strength. The song title, artist and channel category, along with the channel number and preset position (if programmed), will all appear on screen when a video display is in use.

For traffic and weather channels, the current city's name will appear instead of the channel name, and the local weather and temperature will be displayed on screen.

To store a channel in one of the 40 preset locations:

1. Tune to the desired channel and press the OK Button. The lowest available preset number will flash on screen and in the front-panel Message Display.
2. Use the Alphanumeric Keys to enter the numbered preset location you wish to store the channel in, or do nothing if the current preset location is acceptable.
3. Press the OK Button to store the new preset.

Recording

Two-channel analog and digital audio signals, as well as composite and S-video signals, are normally available at the appropriate recording outputs. Thus, to make a recording, you need only make sure to connect your audio or video recorder to the appropriate output jacks, as described in the Installation section, insert blank media and make sure the recorder is turned on and recording while the source is playing.

NOTES:

1. Analog audio signals are not converted to digital form, and digital audio signals are not converted to analog audio form. However, you may record a coaxial or optical digital audio source using either type of digital audio output.

2. Only PCM digital audio signals are available for recording. Proprietary formats such as Dolby Digital and DTS may not be recorded using the digital audio connections, although if the source is connected to the AVR using analog audio connections, an analog recording may be made.
3. HDMI and component video sources are not available for recording.
4. Please make certain that you are aware of any copyright restrictions on any material you record. Unauthorized duplication of copyrighted materials is prohibited by federal law.

Stereo Jack Input

Enjoy the full power and resolution of your Harman Kardon system, including a variety of analog surround modes, while listening to content stored on your portable device.

The Stereo Jack is provided on the AVR's rear panel for convenient connection of portable players, such as CD players and the iPod (iPod and cable not included). Purchase a stereo cable with a 1/8" plug on at least one end for connection to the Stereo Jack. Plug the other end of the cable into the portable device's headphone output, and operate the device using its own controls. You may also use a cable with separate left and right audio plugs at one end for connection to any component equipped with analog audio outputs.

You may assign the Stereo Jack and any analog video input to the AUX source, which uses the front-panel inputs by default.

Selecting a Surround Mode

Surround mode selection can be as simple or sophisticated as your individual system and tastes. Feel free to experiment with the many available surround modes on the AVR 254, and you may find a few that become your favorites for certain sources or program types. Although more detailed information on surround modes may be found in the Advanced Functions section, it is easy to select any of the modes available at a given time:

To select a surround mode, press the Surround Modes Button (front panel or remote) repeatedly until the desired option appears: SURR: AUTO SELECT, SURR: VIRTUAL, SURR: STEREO, SURR: MOVIE, SURR: MUSIC or SURR: GAME. The option will be displayed in the Lower Line of the Message Display, and the Surround Modes menu will appear on screen (see Figure 57).

Figure 57 – Surround Modes menu

Auto Select: With this surround mode option selected, the AVR's sophisticated circuitry will analyze the incoming audio signal, identify its type and select an appropriate surround mode. For digital programs, such as movies recorded with a Dolby Digital soundtrack, the AVR will automatically use the native surround format. For two-channel analog and PCM programs, the AVR is programmed to default to Logic 7 Movie mode.

Virtual Surround: When only two main speakers are present in the system, Dolby Virtual Surround may be used to create an enhanced soundfield that virtualizes the missing speakers. Select between Wide and Reference modes, depending on your preferences.

Stereo: When two-channel playback is desired, select the number of speakers used for playback:

- 2 CH STEREO for playback through only two speakers. As described on page 42, you may select Analog Bypass mode for a pure analog signal when analog audio inputs are in use. Simply set the Tone Control setting in the Audio Effects submenu to Off, and the AVR does the rest.
- 5 CH STEREO for playing the left-channel signal through the front and surround left speakers, the right-channel signal through the right speakers and a summed mono signal through the center speaker
- 7 CH STEREO follows the same scheme as 5 CH STEREO, but adds the surround back speakers to the mix. This mode is only available when the surround back speakers are present and have not been reassigned to multizone operation. See the Initial Setup section for more information.

Movie: Select an analog surround mode for movie playback: Logic 7 Movie, DTS Neo:6 Cinema or Dolby Pro Logic II (IIx when seven main speakers are present). The desired mode may also be selected when a compatible digital surround mode is received.

Music: Select an analog surround mode for music playback: Logic 7 Music, DTS Neo:6 Music or Dolby Pro Logic II (IIx when seven main speakers are present). The Dolby Pro Logic II/IIx Music mode allows access to a submenu with some additional settings. See the Advanced Functions section for more information.

Video Game: Select an analog surround mode for game playback: Logic 7 Game, or Dolby Pro Logic II (IIx when seven main speakers are present).

After you have made your selection, press the Back/Exit Button until the screen is cleared.

See the Advanced Functions section for more information on surround modes.

TROUBLESHOOTING GUIDE

SYMPTOM	CAUSE	SOLUTION
Unit does not function when Main Power Switch is pushed	• No AC Power	• Make certain AC power cord is plugged into a live outlet • Check to see whether outlet is switch-controlled
Display lights, but no sound or picture	• Intermittent input connections • **Mute** is on • Volume control is down	• Make certain that all input and speaker connections are secure • Press **Mute Button** • Turn up volume control
No sound from any speaker; light around power switch is red	• Amplifier is in protection mode due to possible short • Amplifier is in protection mode due to internal problems	• Check speaker wire connections for shorts at receiver and speaker ends • Contact your local Harman Kardon service center
No sound from surround or center speakers	• Incorrect surround mode • Input is monaural • Incorrect configuration • Stereo or Mono program material	• Select a mode other than Stereo • There is no surround information from mono sources • Check speaker mode configuration • The surround decoder may not create center- or rear-channel information from nonencoded programs
Unit does not respond to remote commands	• Weak batteries in remote • Wrong device selected • Remote sensor is obscured	• Change remote batteries • Press the AVR selector • Make certain front-panel sensor is in line of sight of remote or connect an optional remote sensor
Intermittent buzzing in tuner	• Local interference	• Move unit or antenna away from computers, fluorescent lights, motors or other electrical appliances
Letters flash in the channel indicator display and digital audio stops	• Digital audio feed paused	• Resume play for DVD • Check that the correct digital input is selected
Surround Back Speaker settings cannot be accessed, and test tone does not play through Surround Back Speakers	• Multizone system has been turned on, and the surround back channels were reassigned to multizone operation	• Use the menu system to access the Zone 2 menu and turn off the multizone system.
The XM Preview Channel (001) is silent	• XM antenna is not plugged in • XM antenna is not located in such a way as to enable reception	• Make sure you are using a home audio XM antenna module designed for use with XM Ready home audio equipment, and that the module is plugged into the XM Radio Jack on the rear panel of the receiver. • The XM Antenna module needs to be placed with an unobstructed view of the southern sky, or within range of an XM terrestrial repeater. If necessary, purchase an extension cable from your XM Radio dealer.
Unable to activate Program mode on remote	• Source Selector not held for at least 3 seconds	• The selector will light as you initially press it, and go dark as you hold it down. Wait at least 3 seconds for the selector to light up again.
Remote behaves erratically	• Buttons are pressed too hard	• Always press remote control buttons as gently as possible.
Remote buttons light, but AVR does not respond	• Remote is in Zone 2 mode	• Slide the Zone Switch at the bottom of the remote to the Zone 1 position

Additional information on troubleshooting possible problems with your AVR 254, or installation-related issues, may be found in the list of "Frequently Asked Questions", which is located in the Product Support section of our Web site at www.harmankardon.com.

Erase a macro as follows:
1. Simultaneously press and hold the Activity Button and the Numeric Key or AVR Power On Button assigned to the activity until the Source Selector or AVR Settings Button lights.
2. Press the Activity Button to erase the macro.

Resetting the Remote
To reset the remote to its factory defaults, simultaneously press and hold the TV Source Selector and the "0" Alphanumeric Key. When the TV Button re-lights, enter the code "333". When the TV Button goes out, and all of the Source Selectors flash, the remote will have been fully reset.

Processor Reset
There may be instances when you wish to fully reset the AVR 254 to its factory defaults, or the unit may behave erratically after a power surge. To correct erratic behavior, first try turning the Master Power Switch off and unplugging the AC power cord for at least three minutes. Plug the cord back in and turn the receiver back on. If this doesn't help, try a system reset.

NOTES:

- A system reset erases all user configurations, including video resolution, speaker and level settings, and tuner presets. After a reset, you will need to reenter all of these settings.

- The RS-232 Reset Button on the rear panel of the AVR 254 does not perform a system reset. DO NOT press the RS-232 Reset Button.

To reset the AVR 254, place the receiver in Standby mode (press the front-panel Standby/On Switch so that the Power Indicator turns amber).
Then press and hold the front-panel OK Button for at least five seconds until the RESET message appears in the display.

Follow the directions in the owner's manual on page 32 to restore the picture if necessary.

If the receiver still does not function correctly after a processor reset, contact an authorized Harman Kardon service center for assistance.
Authorized service centers may be located by visiting our Web site at www.harmankardon.com.

Memory
If the AVR 254 is unplugged or experiences a power outage, it will retain user settings for up to four weeks.

1. Removing the Top Cabinet

Remove the Screws ① ~ ⑬

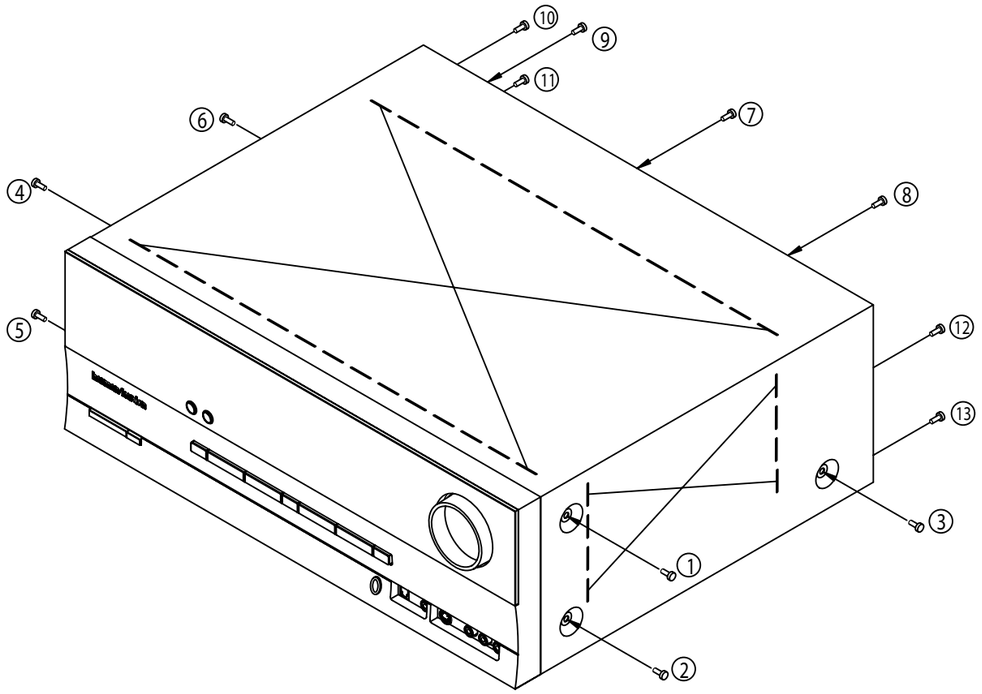

2. Removing the Front Panel

Remove the Screws ① ~ ⑨

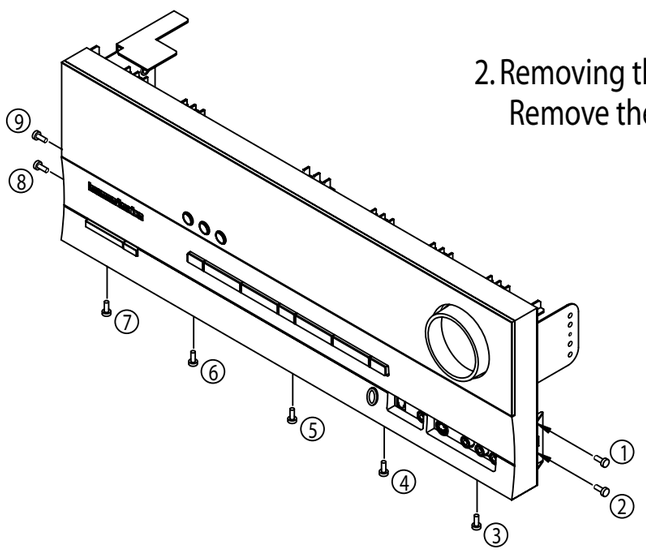

3. Removing the Rear Panel

Remove the Screws ① ~ ㉝

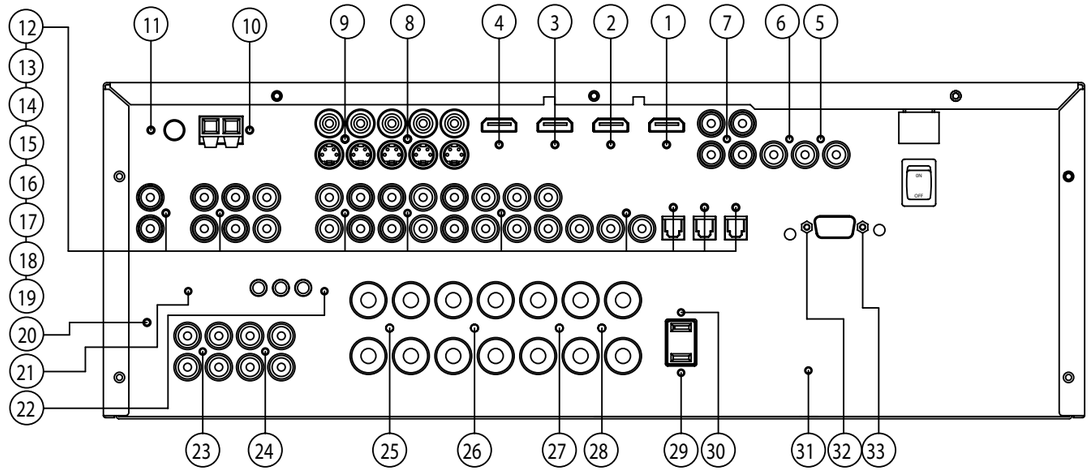

4. Removing the Main PCB

Remove the Screws ① ~ ⑦

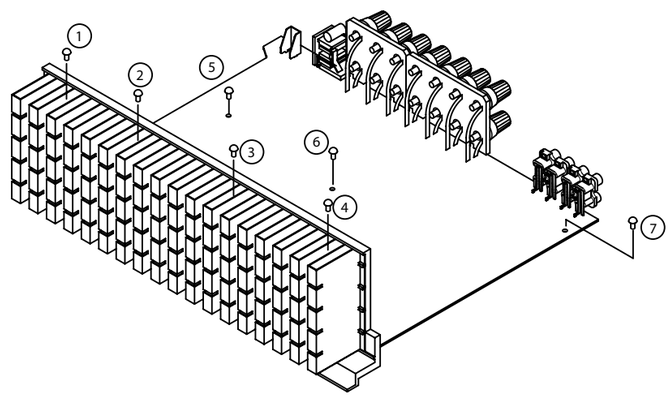

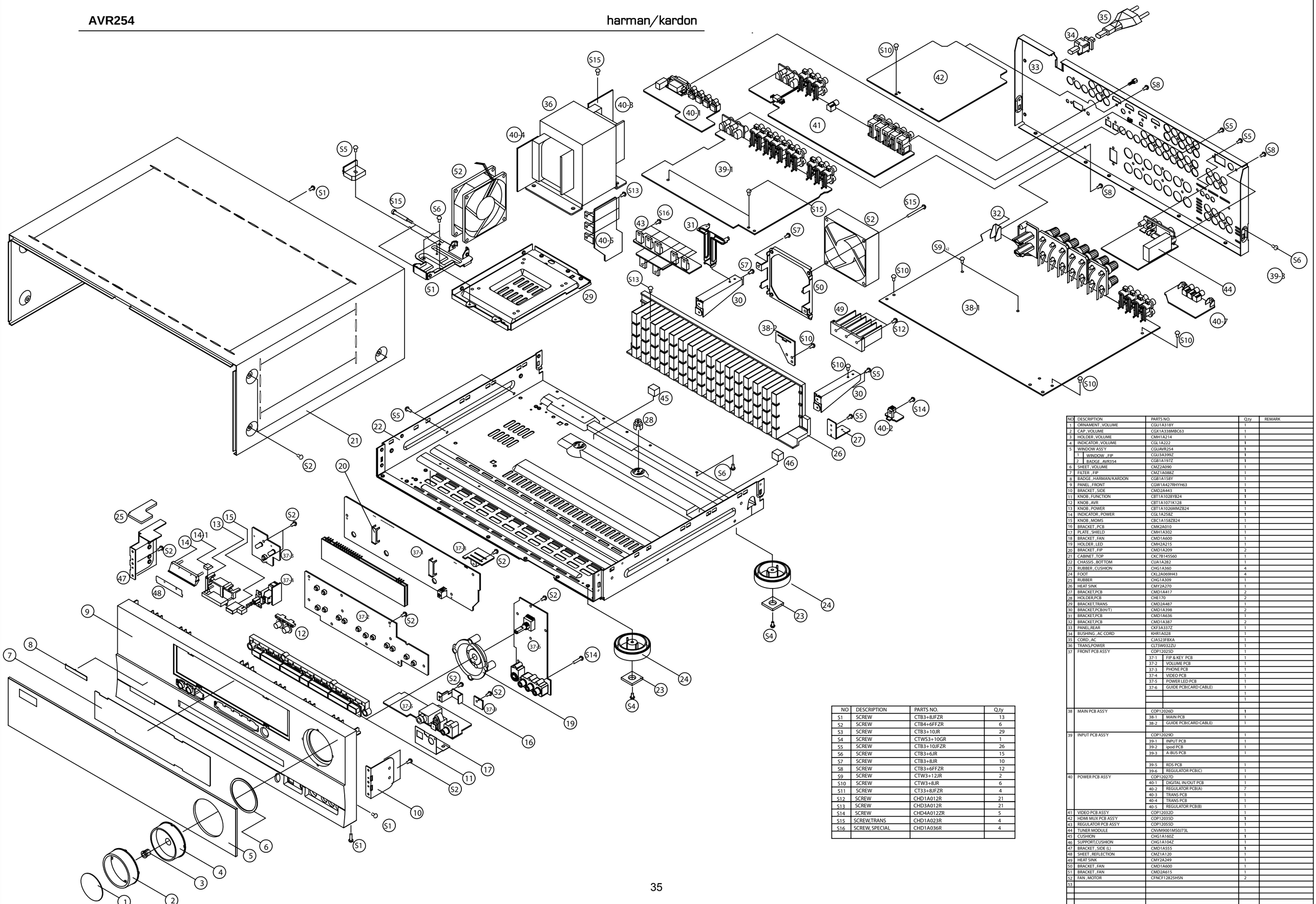

NO	DESCRIPTION	PARTS NO.	Q.ty
S1	SCREW	CTB3+8JFZR	13
S2	SCREW	CTB4+6FFZR	6
S3	SCREW	CTB3+10JR	29
S4	SCREW	CTWS3+10GR	1
S5	SCREW	CTB3+10JFZR	26
S6	SCREW	CTB3+6JR	15
S7	SCREW	CTB3+8JR	10
S8	SCREW	CTB3+6FFZR	12
S9	SCREW	CTW3+12JR	2
S10	SCREW	CTW3+8JR	6
S11	SCREW	CT33+8JFZR	4
S12	SCREW	CHD1A012R	21
S13	SCREW	CHD3A012R	21
S14	SCREW	CHD4A012ZR	5
S15	SCREW,TRANS	CHD1A023R	4
S16	SCREW, SPECIAL	CHD1A036R	4

NO	DESCRIPTION	PARTS NO.	Q.ty	REMARK
1	ORNAMENT , VOLUME	CGU1A318Y	1	
2	CAP , VOLUME	CGX1A338MBC63	1	
3	HOLDER , VOLUME	CMH1A214	1	
4	INDICATOR, VOLUME	CGL1A222	1	
5	WINDOW ASS'Y	CGUAVR254	1	
1	WINDOW , FIP	CGU3A399Z	1	
2	BADGE , AVR354	CGB1A197Z	1	
6	SHEET , VOLUME	CMZ2A090	1	
7	FILTER , FIP	CMZ1A088Z	1	
8	BADGE, HARMAN/KARDON	CGB1A158Y	1	
9	PANEL , FRONT	CGW1A427RHYH63	1	
10	BRACKET , SIDE	CMD2A443	1	
11	KNOB , FUNCTION	CBT1A1028YB24	1	
12	KNOB , AVR	CBT1A1071K128	1	
13	KNOB , POWER	CBT1A1026MMZB24	1	
14	INDICATOR , POWER	CGL1A258Z	1	
15	KNOB , MOMS	CBC1A158ZB24	1	
16	BRACKET , PCB	CMK2A010	1	
17	PLATE , SHIELD	CMH1A302	1	
18	BRACKET , FAN	CMD1A600	1	
19	HOLDER , LED	CMH2A215	1	
20	BRACKET , FIP	CMD1A209	2	
21	CABINET ,TOP	CKC7B145560	1	
22	CHASSIS ,BOTTOM	CUA1A282	1	
23	RUBBER , CUSHION	CHG1A360	4	
24	FOOT	CKL2A069H43	4	
25	RUBBER	CHG1A309	1	
26	HEAT SINK	CMY2A270	1	
27	BRACKET,PCB	CMD1A417	2	
28	HOLDER,PCB	CHE170	2	
29	BRACKET,TRANS	CMD2A487	1	
30	BRACKET,PCB(H/T)	CMD1A398	2	
31	BRACKET,PCB	CMD1A636	1	
32	BRACKET,PCB	CMD1A387	2	
33	PANEL,REAR	CKF3A337Z	1	
34	BUSHING , AC CORD	KHR1A028	1	
35	CORD , AC	CJA523FBXA	1	
36	TRANS,POWER	CLTSW0322U	1	
37	FRONT PCB ASS'Y	COP12025D	1	
	37-1 FIP & KEY PCB		1	
	37-2 VOLUME PCB		1	
	37-3 PHONE PCB		1	
	37-4 VIDEO PCB		1	
	37-5 POWER LED PCB		1	
	37-6 GUIDE PCB(CARD CABLE)		1	
			1	
			1	
38	MAIN PCB ASS'Y	COP12026D	1	
	38-1 MAIN PCB		1	
	38-2 GUIDE PCB(CARD CABLE)		1	
39	INPUT PCB ASS'Y	COP12029D	1	
	39-1 INPUT PCB		1	
	39-2 ipod PCB		1	
	39-3 A-BUS PCB		1	
	39-5 RDS PCB		1	
	39-6 REGULATOR PCB(C)		1	
40	POWER PCB ASS'Y	COP12027D	1	
	40-1 DIGITAL IN/OUT PCB		1	
	40-2 REGULATOR PCB(A)		7	
	40-3 TRANS PCB		1	
	40-4 TRANS PCB		1	
	40-5 REGULATOR PCB(B)		1	
41	VIDEO PCB ASS'Y	COP12032D	1	
42	HDMI MUX PCB ASS'Y	COP12035D	1	
43	REGULATOR PCB ASS'Y	COP12055D	1	
44	TUNER MODULE	CNVM9001M50J73L	1	
45	CUSHION	CHG1A160Z	1	
46	SUPPORT,CUSHION	CHG1A104Z	1	
47	BRACKET , SIDE (L)	CMD1A555	1	
48	SHEET , REFLECTION	CMZ1A120	1	
49	HEAT SINK	CMY2A249	1	
50	BRACKET , FAN	CMD1A600	1	
51	BRACKET , FAN	CMD2A615	1	
52	FAN , MOTOR	CFNCF12825H5N	2	
53				

NO	DESCRIPTION	PART NO.	Q,ty
1	ORNAMENT , VOLUME	CGU1A318Y	1
2	CAP , VOLUME	CGX1A338MBC63	1
3	HOLDER , VOLUME	CMH1A214	1
4	INDICATOR , VOLUME	CGL1A222	1
5	WINDOW ASS'Y	CGUAVR254	1
	1 WINDOW , FIP	CGU3A399Z	1
	2 BADGE , AVR354	CGB1A197Z	1
6	SHEET , VOLUME	CMZ2A090	1
7	FILTER , FIP	CMZ1A088Z	1
8	BADGE , HARMAN/KARDON	CGB1A158Y	1
9	PANEL , FRONT	CGW1A427RHYH63	1
10	BRACKET , SIDE	CMD2A443	1
11	KNOB , FUNCTION	CBT1A1028YB24	1
12	KNOB , AVR	CBT1A1071K128	1
13	KNOB , POWER	CBT1A1026MMZB24	1
14	INDICATOR , POWER	CGL1A258Z	1
15	KNOB , MOMS	CBC1A158ZB24	1
16	BRACKET , PCB	CMK2A010	1
17	PLATE , SHIELD	CMH1A302	1
18	BRACKET , FAN	CMD1A600	1
19	HOLDER , LED	CMH2A215	1
20	BRACKET , FIP	CMD1A209	2
21	CABINET , TOP	CKC7B145S60	1
22	CHASSIS , BOTTOM	CUA1A282	1
23	RUBBER , CUSHION	CHG1A360	4
24	FOOT	CKL2A069H43	4
25	RUBBER	CHG1A309	1
26	HEAT SINK	CMY2A270	1
27	BRACKET,PCB	CMD1A417	2
28	HOLDER,PCB	CHE170	2
29	BRACKET,TRANS	CMD2A487	1
30	BRACKET,PCB(H/T)	CMD1A398	2
31	BRACKET,PCB	CMD1A636	1
32	BRACKET,PCB	CMD1A387	2
33	PANEL,REAR	CKF3A337Z	1
34	BUSHING , AC CORD	KHR1A028	1
35	CORD , AC	CJA523FBXA	1
36	TRANS,POWER	CLT5W032ZU	1
37	FRONT PCB ASS'Y		1
	37-1 FIP & KEY PCB		1
	37-2 VOLUME PCB		1
	37-3 PHONE PCB		1
	37-4 VIDEO PCB		1
	37-5 POWER LED PCB		1
	37-6 GUIDE PCB(CARD CABLE)		1
			1
			1
38	MAIN PCB ASS'Y		1
	38-1 MAIN PCB		1
	38-2 GUIDE PCB(CARD CABLE)		1
39	INPUT PCB ASS'Y		1
	39-1 INPUT PCB		1
	39-2 ipod PCB		1
	39-3 A-BUS PCB		1
	39-5 RDS PCB		1
	39-6 REGULATOR PCB(C)		1
40	POWER PCB ASS'Y		1
	40-1 DIGITAL IN/OUT PCB		1
	40-2 REGULATOR PCB(A)		7
	40-3 TRANS PCB		1
	40-4 TRANS PCB		1
	40-5 REGULATOR PCB(B)		1
41	VIDEO PCB ASS'Y		1
42	HDMI MUX PCB ASS'Y		1
43	REGULATOR PCB ASS'Y		1
44	TUNER MODULE	CNVM9001MS0J73L	1
45	CUSHION	CHG1A160Z	1
46	SUPPORT,CUSHION	CHG1A104Z	1
47	BRACKET , SIDE (L)	CMD1A555	1
48	SHEET , REFLECTION	CMZ1A120	1
49	HEAT SINK	CMY2A249	1
50	BRACKET , FAN	CMD1A600	1
51	BRACKET , FAN	CMD2A615	1
52	FAN , MOTOR	CFNCF12825HSN	2

AMPLIFIER SECTION BIAS ADJUSTMENT

Measurement condition
.No input signal or volume position is minimum.

Standard value
.Ideal current = 48mA (± 5%)
.Ideal DC Voltage = 25.92mV (± 5%)

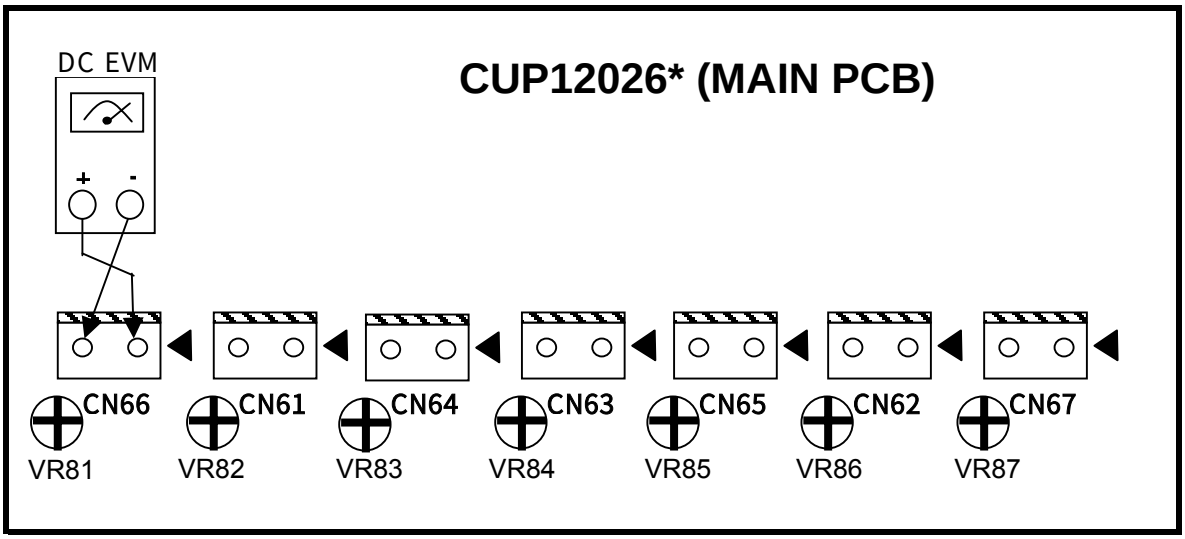

DC VOLTMETER ; Connect to
CN66(SL),CN61(CEN),CN64(SR),CN63(FL),CN65(SBL(AVR254,255,354,355)),CN62(FR),CN67(SBR)

NO.	Channel	Adjust for	Adjustment
1	Front Left	25.92mV (± 5%)	CN63
2	Front Right	25.92mV (± 5%)	CN62
3	Center	25.92mV (± 5%)	CN61
4	Surround Left	25.92mV (± 5%)	CN66
5	Surround Right	25.92mV (± 5%)	CN64
6	Surround Back Left	25.92mV (± 5%)	CN65
7	Surround Back Right	25.92mV (± 5%)	CN67

AVR254/255/354/355 BLOCK DIAGRAM

ALL version
has TUNER module.
TUNER MODULE
TO FUNCTION SEL
TUNER L/R
TUNER CONT
A-BUS OUT AVR355 OPTION
MULTI_OUT AVR354&355 OPTION
NJW1159
2CH VOL
6dB AMP
MULTI_MUTE * 2EA
68 CHANNEL INPUT
FL/R
SL/R
SBL/R
CEN/SUB
LT
RT
ATT
TONE
PRE-OUT
PRE AMP
FRONT L
FRONT R
SURR L
SURR R
CEN
SUBWOOFER
SBL/MULTI L
SBR/MULTI R
DATA
CLOCK
NJW1197FC2
ANALOG AUDIO
ANALOG 5 IN
ANALOG 4 IN
ANALOG 4 OUT
ANALOG 3 IN
ANALOG 2 IN
ANALOG 2 OUT
ANALOG 1 IN
ANALOG FRONT IN
XM IN
USA VER. ONLY
iPod IN
STEREO or iPod IN
HDMI_IN1
HDMI_IN2
HDMI_IN3
HDMI_OUT
SII9185
(SW IC)
SII9134
(HDMI TX)
HDMI MCLK
HDMI SCLK
HDMI LRCK
HDMI SD
SII9135
(HDMI RX)
I2C_GPIO_CONTROL
I2S/DSP_SPDIF
I2S
FLI3336
TORINO
(SCALER)
ST232CDR
RS232C
SDRAM
32M
DDR SDRAM
256M * 2EA
DIGITAL VIDEO
MAX : 1080p
ADV7342
(DAC)
NJM2566
6dB
8CH VIDEO OUT
CVBS_TORINO IN
S-VID Y_TORINO IN
S-VID C_TORINO IN
Y1/2/3_TORINO IN
Cb1/2/3_TORINO IN
Cr1/2/3_TORINO IN
CONTROL BY I2C
XM RADIO MODULE
XM_DAT
XM_LRCK
XM_BICK
XM_MCK
AK5394
2CH ADC
XM_L
XM_R
USA VER. ONLY
THE BRIDGE II (iPod)
iPod L/R
iPod TX
iPod RX
TMP86F409NG
(8BIT u-COM for iPod)
iPod IN
iPod CONT
iPod CVBS
AVR354 & 355 OPTION
COMPOSITE 3 IN
COMPOSITE 2 IN
COMPOSITE 2 OUT
COMPOSITE 1 IN
CVBS
FLI3336 ANALOG INPUT
NJM2595
S-VIDEO 3 IN
S-VIDEO 2 IN
S-VIDEO 2 OUT
S-VIDEO 1 IN
S-VID Y
S-VID C
NJM2566 ANALOG OUTPUT
COMPOSITE MONITOR OUT
S-VIDEO MONITOR OUT
VIDEO SWITCHING CONTROL BY MCU
COAX.&OPT. FRONT
OPT.1
OPT.2
OPT.3
COAX.1
COAX.2
COAX OUT
A-BUS IR IN
CARR. OUT
ZONE2 IN
REMOTE IN
REMOTE OUT
CS42528
A/D, D/A CONVERTER WITH DIR
24.576MHz
CS497004
DSP
SPI Serial Flash
8 Mbit
M12L16161A
16M SDRAM
74VHC157
2CH MUX
TOSHIBA
16BIT u-COM
EEPROM (32 Kbit)
RST IC
POWER AMP CONT
iPod Buffer IC CONT
VIDEO SWITCHING CONT
** EEP_ROM **
FOR BACK-UP MEMORY.
COMMUNICATION BETWEEN TORINO & TOSHIBA MCU
UART RX/TX
MAIN AMP
P-AMP +29dB
Temp. Sensor
DC/OVER CURRENT
SENS
POWER AMP MUTE
TEMP I/F
HEAT2
PROTECT
P_LINE_FAIL
HP_AMP
MIC_AMP
MIC SIG.
+12V
H_PHONE OUT or MIC_INPUT
FL
FR
SBL/ZONE2 LEFT
SBR/ZONE2 RIGHT
SL
SR
CEN
M/P
ISSUE
2008.02.25
TO XM PART
(TO VIDEO PART)
+5.3V
REGULATOR
(+5V)
TO TORINO PART
+5V
+1.8V
+9VDH
(+9V)
TO DSP PART
+5VD
TO VIDEO PART
(TO IPOD PART)
+9V
-9V
(-5V)
+15V
-15V
(±15V)
TO A-BUS PART
+24V
(±4V)
+VCC1
-VCC1
+VCC2
-VCC2
UNBAL DETECT
+5VL REG
P-DOWN
PWR DOWN
POWER SW
SUB TRANS
STANDBY
AC OUTLET
AC IN
+VKK
FL
REMOTE SENSOR
FL DISPLAY
ROTARY ENCODER (MASTER VR)
STANDBY AMBER/BLUE
MOMS SWITCH
KEY MATRIX
KEY0*2
VR ENC
(BLUE)
VOLUME Indicator
COAX.FRONT
OPT.FRONT
S-VIDEO FRONT
COMPOSITE FRONT
ANALOG FRONT

REVISION	2		4		6	
1		3		5		7	

SCHEMATIC DIAGRAM			SHEET
MODEL	AVR254/255/354/355		1/1
DESIGN	CHECK	APPROVE	DRAWING NO
S.H.Yang	W.Y.Yang	G.S.Wey	BLOCK DIAGRAM 2024BLDZ 1/1
08.02.25	08.02.25	08.02.25	

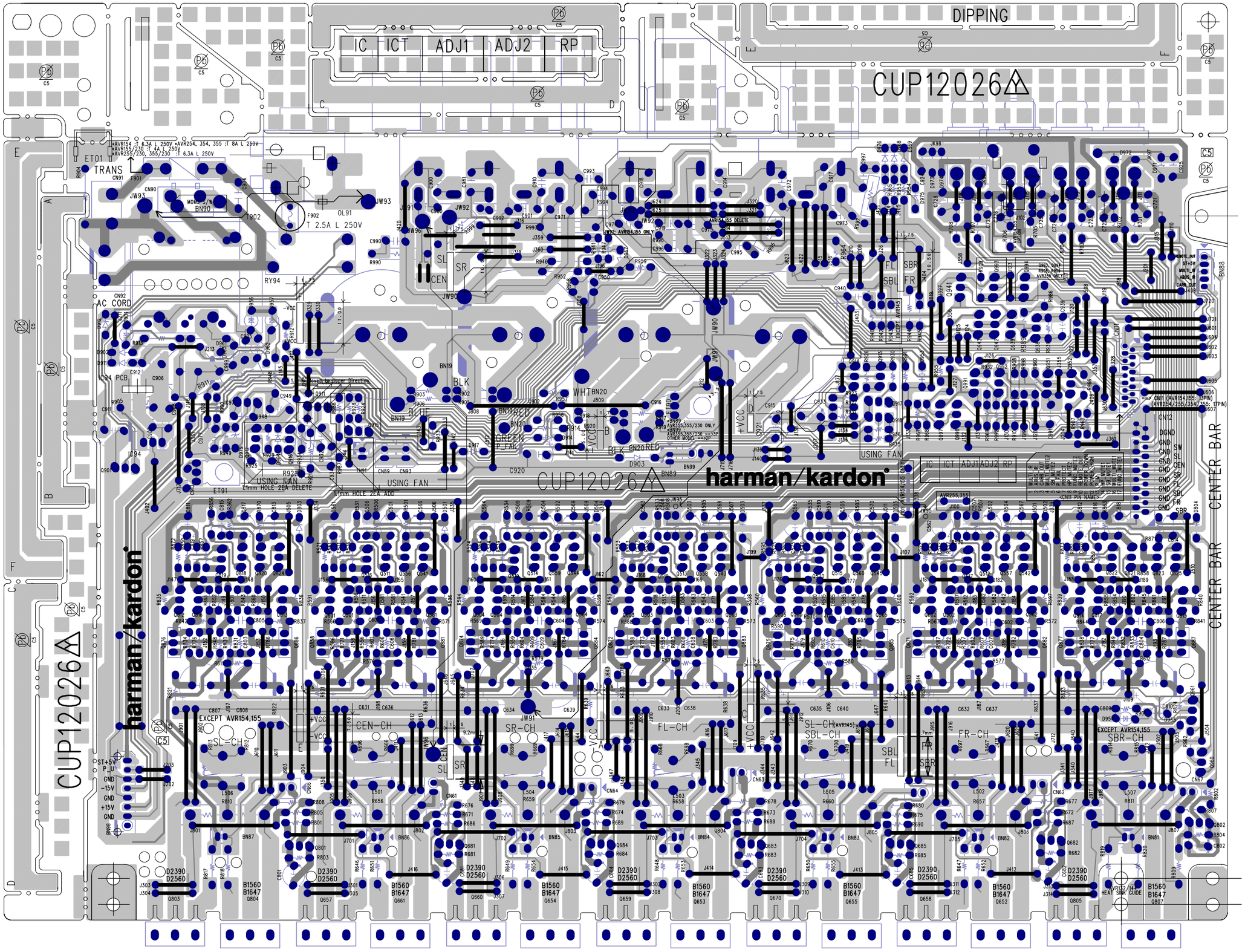

AVRx55 Main_0118.pcb - Tue Mar 11 17:26:03 2008

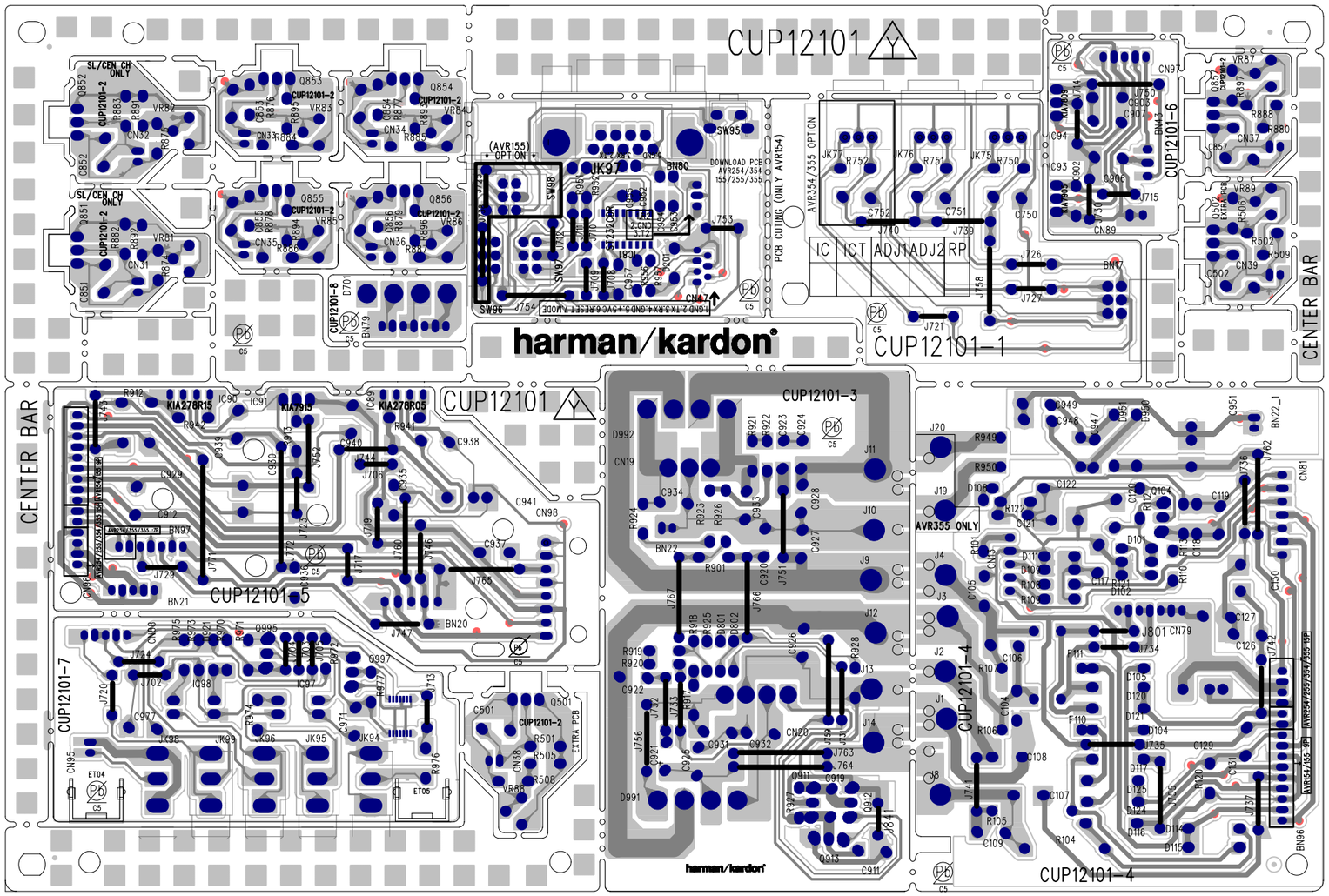
CUP12101
CUP12101-1
CUP12101-2
CUP12101-3
CUP12101-4
CUP12101-5
CUP12101-6
CUP12101-7
CUP12101-8
CENTER BAR
harman/kardon
AVR355 ONLY
PCB CUTING (ONLY AVR154)
AVR354/355 OPTION
DOWNLOAD PCB AVR254/354 155/255/355
EXTRA PCB
IC ICT ADJ1ADJ2RP

harman/kardon®

CUP12055

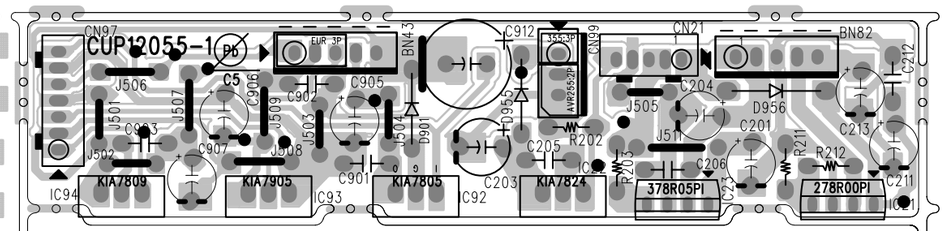

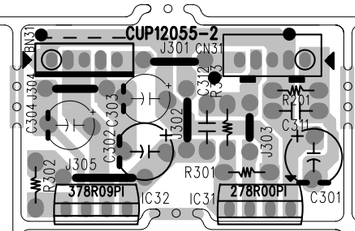

CENTER BAR

CENTER BAR

DIPPING

REGULATOR PCB
AVR 254/255/354/355

P6
C5

CUP12055 harman/kardon®

IC	ICT	ADJ1	ADJ2	RP

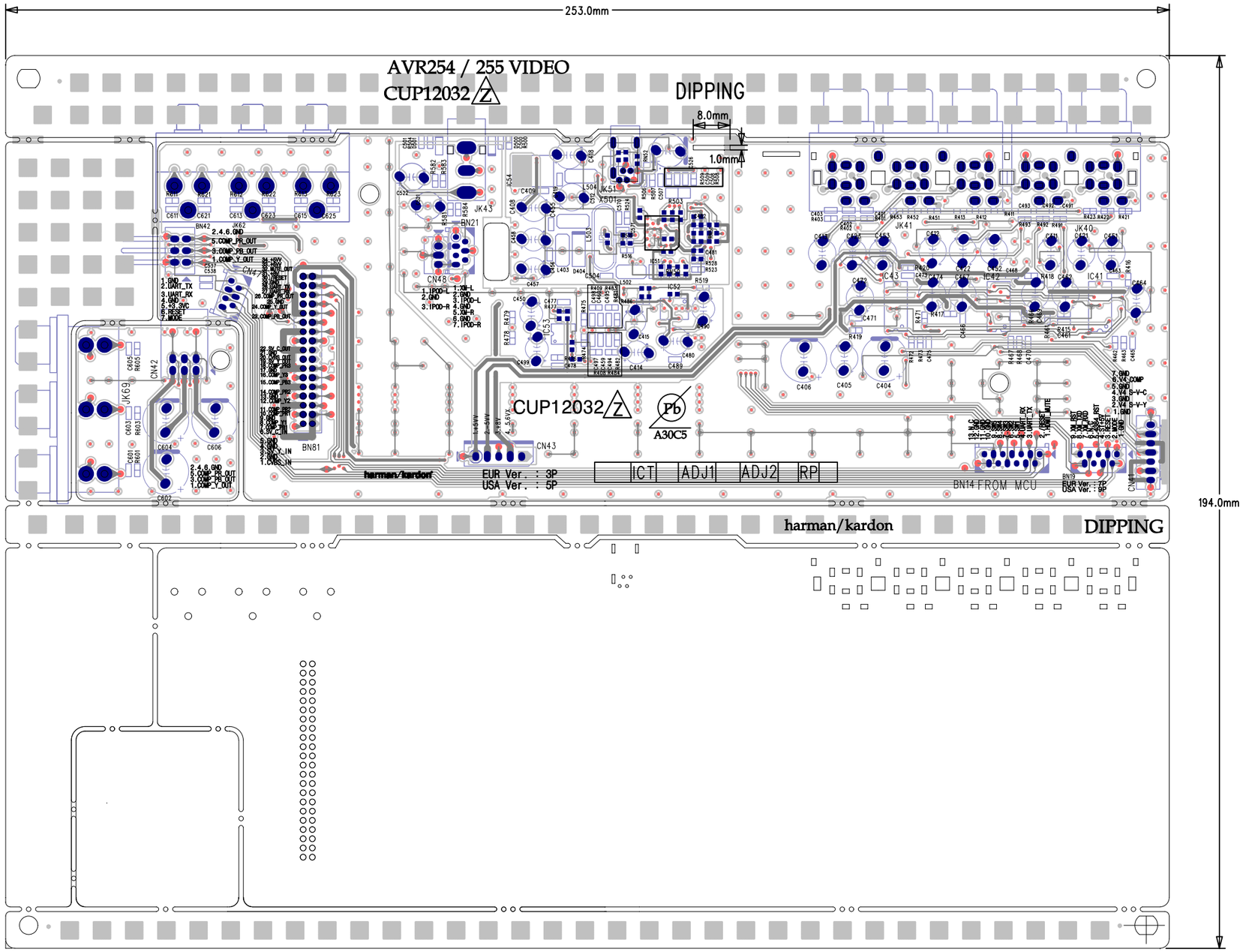
253.0mm
AVR254 / 255 VIDEO
CUP12032
DIPPING
8.0mm
1.0mm
CUP12032
A30C5
EUR Ver. : 3P
USA Ver. : 5P
ICT
ADJ1
ADJ2
RP
BN14 FROM MCU
harman/kardon
DIPPING
194.0mm

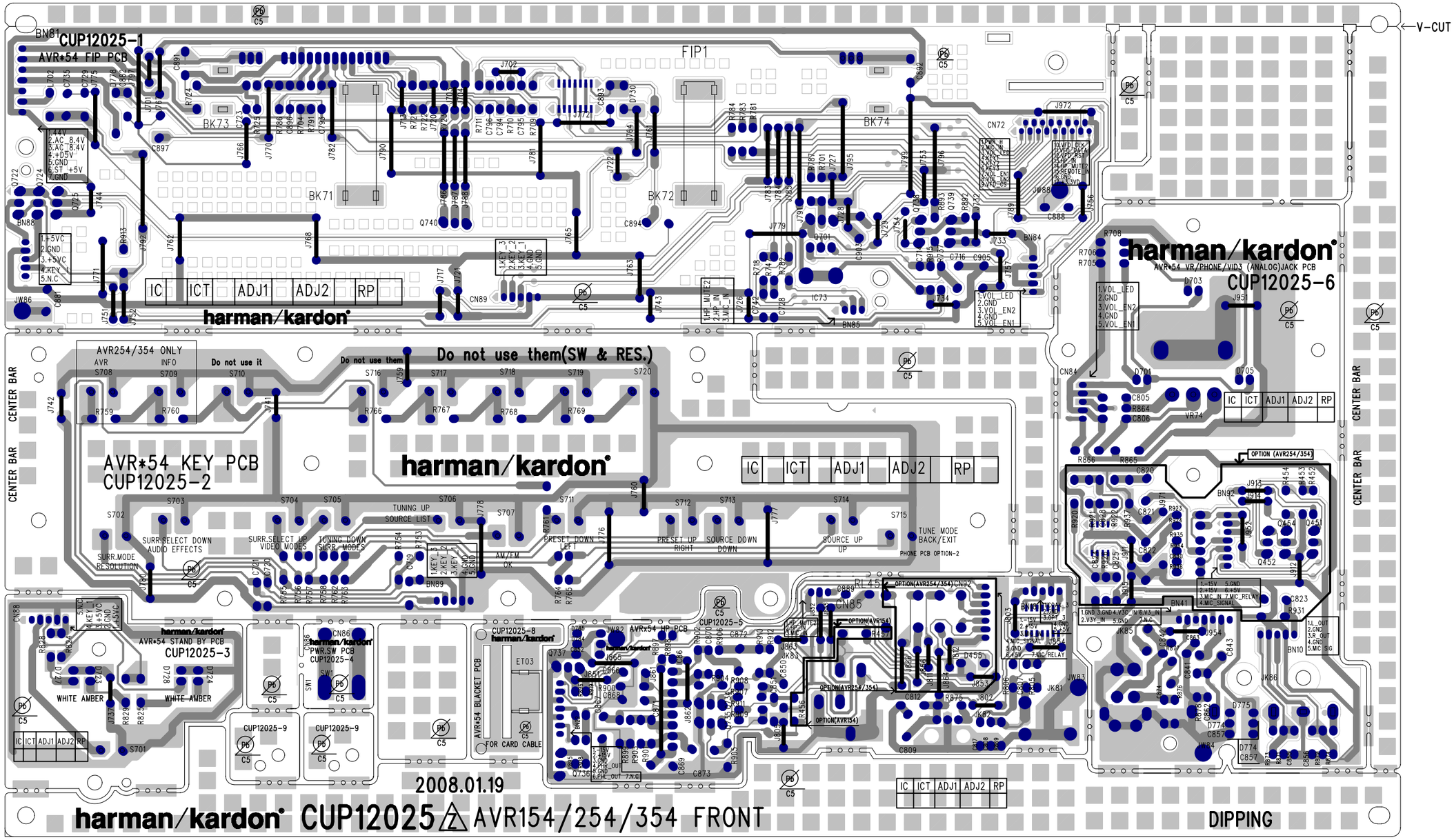
CUP12025-1
AVR*54 FIP PCB
FIP1
BK71
BK72
BK73
BK74
IC ICT ADJ1 ADJ2 RP
harman/kardon
V-CUT
AVR254/354 ONLY
Do not use it
Do not use them
Do not use them(SW & RES.)
AVR*54 KEY PCB
CUP12025-2
TUNING UP
SOURCE LIST
SURR.SELECT DOWN
AUDIO EFFECTS
SURR.SELECT UP
VIDEO MODES
TUNING DOWN
SURR.MODES
SURR.MODE
RESOLUTION
AM/FM
OK
PRESET DOWN
LEFT
PRESET UP
RIGHT
SOURCE DOWN
SOURCE UP
TUNE MODE
BACK/EXIT
PHONE PCB OPTION-2
AVR*54 STAND BY PCB
CUP12025-3
PWR.SW PCB
CUP12025-4
CUP12025-5
CUP12025-8
CUP12025-9
AVR*54 HP PCB
AVR*54 BLACKET PCB
FOR CARD CABLE
OPTION(AVR254/354)
OPTION(AVR154)
AVR*54 VR/PHONE/VID3 (ANALOG)JACK PCB
CUP12025-6
2008.01.19
CUP12025 AVR154/254/354 FRONT
DIPPING
CENTER BAR

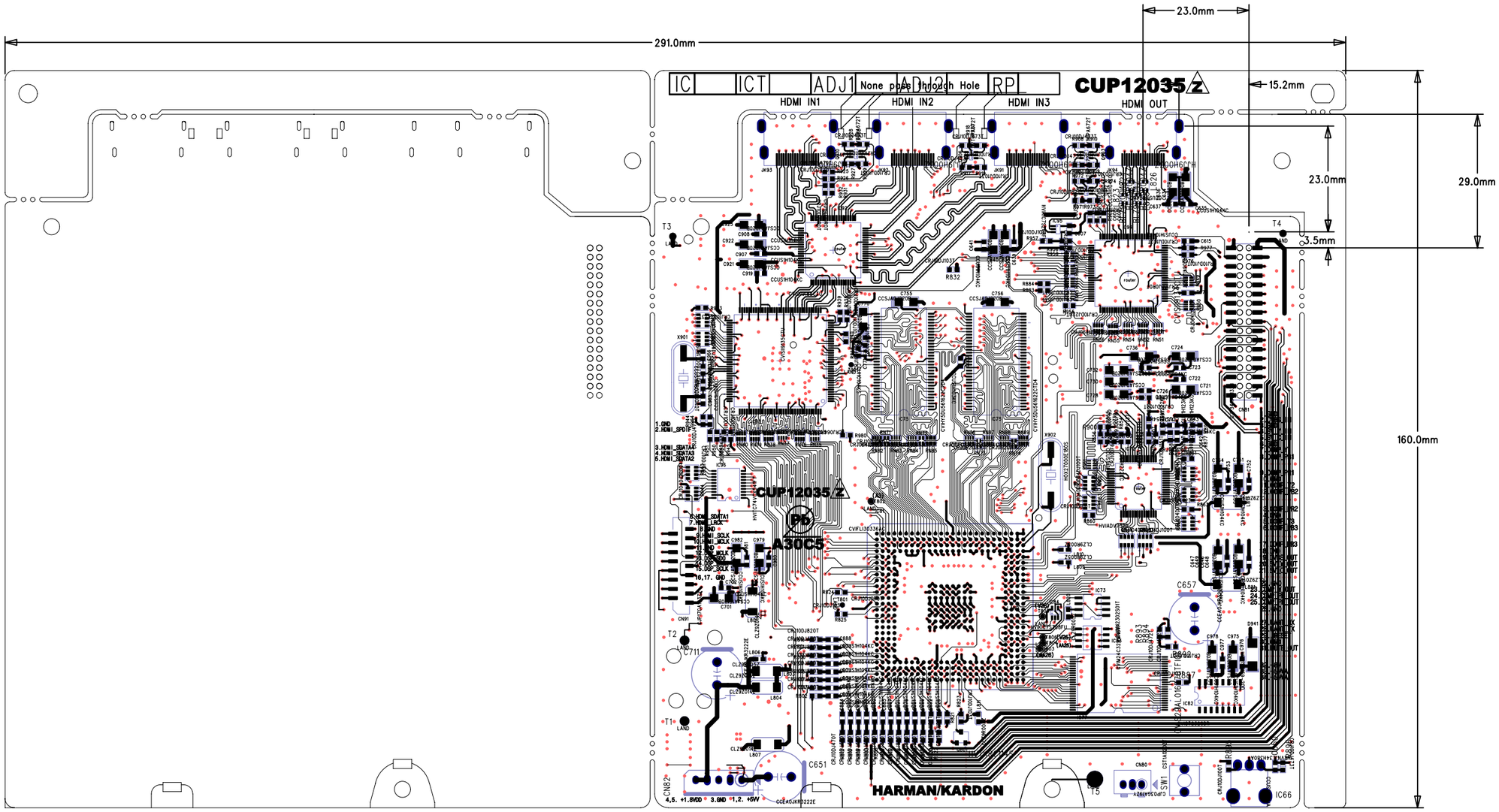

355HDMI0116_GPIO.pcb – Tue Mar 11 16:19:20 2008

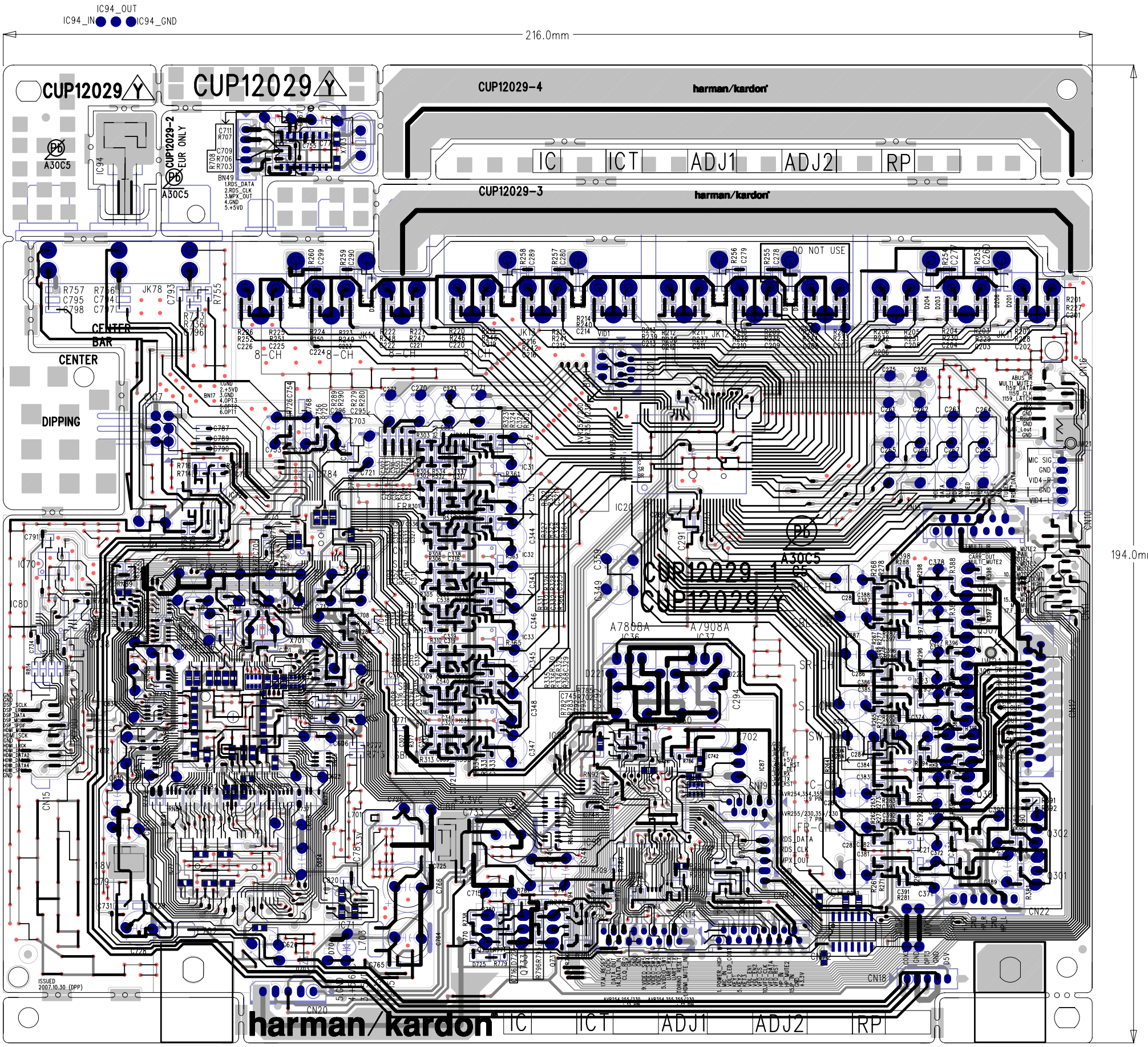

AVR355 INPUT_0212.pcb - Tue Mar 11 17:17:48 2008

AVR254 Electrical Parts List

Ref. Designator	Part Number	Description		Qty	
FRONT PCB ASSY		**CUP12025**			
Capacitors					
C714	CCBS1H151KBT	CAP , CERAMIC	150UF 50V K	1	EA
C716	CCEA1AH331T	CAP , ELECT	330UF 10V	1	EA
C719	CCBS1H102KBT	CAP , CERAMIC	1000PF 50V K	1	EA
C720	CCBS1H102KBT	CAP , CERAMIC	1000PF 50V K	1	EA
C721	CCBS1H102KBT	CAP , CERAMIC	1000PF 50V K	1	EA
C723	CCBS1H104ZFT	CAP , CERAMIC	0.1UF 50V Z	1	EA
C728	CCBS1H104ZFT	CAP , CERAMIC	0.1UF 50V Z	1	EA
C729	CCBS1H473ZFT	CAP , CERAMIC	0.047UF 50V Z	1	EA
C735	CCEA1CKS100T	CAP , ELECT	10UF 16V	1	EA
C742	CCBS1H223ZFT	CAP , CERAMIC	0.022UF 50V Z	1	EA
C793	CCBS1H104ZFT	CAP , CERAMIC	0.1UF 50V Z	1	EA
C794	CCBS1C222MXT	CAP , CERAMIC	2200PF 16V	1	EA
C795	CCBS1H102KBT	CAP , CERAMIC	1000PF 50V K	1	EA
C796	CCBS1H102KBT	CAP , CERAMIC	1000PF 50V K	1	EA
C805	CCBS1H223ZFT	CAP , CERAMIC	0.022UF 50V Z	1	EA
C806	CCBS1H223ZFT	CAP , CERAMIC	0.022UF 50V Z	1	EA
C807	CCBS1H104ZFT	CAP , CERAMIC	0.1UF 50V Z	1	EA
C808	CCBS1H181KBT	CAP , CERAMIC	180PF 50V	1	EA
C809	CCEA1AH471T	CAP , ELECT	470UF 10V	1	EA
C812	CCBS1H104ZFT	CAP , CERAMIC	0.1UF 50V Z	1	EA
C817	CCBS1H100JCT	CAP , CERAMIC	10PF 50V	1	EA
C820	CCEA1HH100T	CAP , ELECT	10UF 50V	1	EA
C821	CCEA1EH470T	CAP , ELECT	47UF 25V	1	EA
C822	CCEA1EH470T	CAP , ELECT	47UF 25V	1	EA
C823	CCEA1HH100T	CAP , ELECT	10UF 50V	1	EA
C824	CCBS1H471KBT	CAP , CERAMIC	470PF 50V	1	EA
C825	CCBS1H151KBT	CAP , CERAMIC	150PF 50V	1	EA
C828	CCBS1H470JT	CAP , CERAMIC	47PF 50V	1	EA
C830	CCBS1H473ZFT	CAP , CERAMIC	0.047F 50V	1	EA
C841	CCEA1HH100T	CAP , ELECT	10UF 50V	1	EA
C842	CCEA1HH100T	CAP , ELECT	10UF 50V	1	EA
C843	CCEA1HH100T	CAP , ELECT	10UF 50V	1	EA
C850	CCBS1H471KBT	CAP , CERAMIC	470PF 50V	1	EA
C851	CCBS1H471KBT	CAP , CERAMIC	470PF 50V	1	EA
C852	CCBS1H104ZFT	CAP , CERAMIC	0.1UF 50V Z	1	EA
C855	CCBS1H101KBT	CAP , CERAMIC	100PF 50V K	1	EA
C856	CCBS1H101KBT	CAP , CERAMIC	100PF 50V K	1	EA
C857	CCBS1H104ZFT	CAP , CERAMIC	0.1UF 50V Z	1	EA
C862	CCBS1H101KBT	CAP , CERAMIC	100PF 50V K	1	EA
C863	CCBS1H101KBT	CAP , CERAMIC	100PF 50V K	1	EA
C866	CCEA1HKS100T	CAP , ELECT	10UF 50V SMALL SIZE	1	EA
C867	CCEA1HKS100T	CAP , ELECT	10UF 50V SMALL SIZE	1	EA
C868	CCEA1EKS470T	CAP , ELECT	47UF 25V	1	EA
C869	CCEA1EKS470T	CAP , ELECT	47UF 25V	1	EA
C870	CCBS1H681KBT	CAP , CERAMIC	680PF 50V K	1	EA
C871	CCBS1H681KBT	CAP , CERAMIC	680PF 50V K	1	EA
C872	CCEA1CH331T	CAP , ELECT	330UF 16V	1	EA
C873	CCEA1CH331T	CAP , ELECT	330UF 16V	1	EA
C874	CCBS1H101KBT	CAP , CERAMIC	100PF 50V K	1	EA
C882	CCBS1H104ZFT	CAP , CERAMIC	0.1UF 50V Z	1	EA
C888	CCBS1H104ZFT	CAP , CERAMIC	0.1UF 50V Z	1	EA
C889	CCBS1H104ZFT	CAP , CERAMIC	0.1UF 50V Z	1	EA
C891	CCBS1H223ZFT	CAP , CERAMIC	0.022UF 50V Z	1	EA
C892	CCBS1H223ZFT	CAP , CERAMIC	0.022UF 50V Z	1	EA
C893	CCBS1H223ZFT	CAP , CERAMIC	0.022UF 50V Z	1	EA
C894	CCEA1CKS100T	CAP , ELECT	10UF 16V	1	EA
C896	CCBS1H223ZFT	CAP , CERAMIC	0.1UF 50V Z	1	EA
C897	CCEA1AH471T	CAP , ELECT	470UF 10V	1	EA
C903	CCEA1HKS2R2T	CAP , ELECT	2.2UF 50V SMALL SIZE	1	EA
C905	CCEA1HKS2R2T	CAP , ELECT	2.2UF 50V SMALL SIZE	1	EA

Ref. Designator	Part Number	Description		Qty	
FRONT PCB ASSY		**CUP12025**			
Semiconductors					
D455	CVD1SS133MT	DIODE	1SS133	1	EA
D730	USE BUSS WIRE	WIRE , COPPER	SN95/PB5 , 0.6	0.018	M
D774	CVD1SS133MT	DIODE	1SS133	1	EA
D775	CVD1SS133MT	DIODE	1SS133	1	EA
D784	CVD1SS133MT	DIODE	1SS133	1	EA
D785	CVD1SS133MT	DIODE	1SS133	1	EA
Q451	HVTKRC107MT	TRANSISTOR NPN	KRC107M	1	EA
Q452	HVTKRA107MT	TRANSISTOR PNP	KRA107M	1	EA
Q454	HVTKRC107MT	TRANSISTOR NPN	KRC107M	1	EA
Q701	HVTKRC107MT	TRANSISTOR NPN	KRC107M	1	EA
Q722	HVTKRA107MT	TRANSISTOR PNP	KRA107M	1	EA
Q724	HVTKRC107MT	TRANSISTOR NPN	KRC107M	1	EA
Q725	HVTKRC107MT	TRANSISTOR NPN	KRC107M	1	EA
Q734	HVTKTC2874BT	TRANSISTOR , MUTE NPN	KTC2874B	1	EA
Q735	HVTKTC2874BT	TRANSISTOR , MUTE NPN	KTC2874B	1	EA
Q736	HVTKTC2874BT	TRANSISTOR , MUTE NPN	KTC2874B	1	EA
Q737	HVTKTC2874BT	TRANSISTOR , MUTE NPN	KTC2874B	1	EA
Q738	HVTKRC107MT	TRANSISTOR NPN	KRC107M	1	EA
Q739	HVTKTA1271YT	TRANSISTOR PNP	KTA1271Y	1	EA
Q740	HVTKTC3200GRT	TRANSISTOR NPN	KTC3200GR	1	EA
D778	HVD1N5819T	DIODE , SCHOTTKY	1N5819	1	EA
D786	CVD1SS133MT	DIODE	1SS133	1	EA
D787	CVD1SS133MT	DIODE	1SS133	1	EA
IC73	HRVNJL34H380A	SENSOR , REMOCON	SENSOR	1	EA
IC75	HVI74ACT04MTR	I.C , HEX INVERTER	JRC(74ACT04MTR)	1	EA
IC76	HVI74HCU04AFNG	I.C , INVERTER	FAIRCHILD(74HCU04AFNG	1	EA
IC86	HVINJM4556AL	I.C , DUAL OP AMP	JRC(NJM4556AL)	1	EA
IC87	HVINJM2068MTE1	I.C , DUAL OP AMP	JRC(NJM2068MTE1)	1	EA
D701	CVD1L0345W31BOCT20	L.E.D , WHITE	LED	1	EA
D703	CVD1L0345W31BOCT20	L.E.D , WHITE	LED	1	EA
D705	CVD1L0345W31BOCT20	L.E.D , WHITE	LED	1	EA
D723	CVD30ASOGCAA-S7	L.E.D , ORANGE	LED	1	EA
D724	CVD30ASOGCAA-S7	L.E.D , ORANGE	LED	1	EA
D727	CVD1L0345W31BOCT20	L.E.D , WHITE	LED	1	EA
D728	CVD1L0345W31BOCT20	L.E.D , WHITE	LED	1	EA
Resistors					
R452	CRD20TJ103T	RES , CARBON	10K OHM 1/5W J	1	EA
R453	CRD20TJ362T	RES , CARBON	3.6K OHM 1/5W J	1	EA
R454	CRD20TJ102T	RES , CARBON	1K OHM 1/5W J	1	EA
R701	CRD20TJ103T	RES , CARBON	10K OHM 1/5W J	1	EA
R704	CRD20TJ100T	RES , CARBON	10 OHM 1/5W J	1	EA
R705	CRD20TJ101T	RES , CARBON	100 OHM 1/5W J	1	EA
R706	CRD20TJ101T	RES , CARBON	100 OHM 1/5W J	1	EA
R708	CRD20TJ101T	RES , CARBON	100 OHM 1/5W J	1	EA
R709	CRD20TJ470T	RES , CARBON	47 OHM 1/5W J	1	EA
R710	CRD20TJ470T	RES , CARBON	47 OHM 1/5W J	1	EA
R711	CRD20TJ470T	RES , CARBON	47 OHM 1/5W J	1	EA
R718	CRD20TJ222T	RES , CARBON	2.2K OHM 1/5W J	1	EA
R721	CRD20TJ101T	RES , CARBON	100 OHM 1/5W J	1	EA
R722	CRD20TJ104T	RES , CARBON	100K OHM 1/5W J	1	EA
R723	CRD20TJ393T	RES , CARBON	39K OHM 1/5W J	1	EA
R724	CRD20TJ100T	RES , CARBON	10 OHM 1/5W J	1	EA
R725	CRD20TJ100T	RES , CARBON	10 OHM 1/5W J	1	EA
R737	CRD20TJ100T	RES , CARBON	10 OHM 1/5W J	1	EA
R747	CRD20TJ103T	RES , CARBON	10K OHM 1/5W J	1	EA
R753	CRD20TF1001T	RES , CARBON	1K /1/5W /F	1	EA
R754	CRD20TF1501T	RES , CARBON	1.5K /1/5W /F	1	EA
R755	CRD20TF1801T	RES , CARBON	1.8K /1/5W /F	1	EA
R756	CRD20TF2701T	RES , CARBON	2.7K /1/5W/F	1	EA
R757	CRD20TF3301T	RES , CARBON	3.3K /1/5W/F	1	EA
R758	CRD20TF5601T	RES , CARBON	5.6K /1/5W/F	1	EA

Ref. Designator	Part Number	Description		Qty	
FRONT PCB ASSY		**CUP12025**			
R759	CRD20TF1001T	RES , CARBON	1K /1/5W /F	1	EA
R760	CRD20TF1501T	RES , CARBON	1.5K /1/5W /F	1	EA
R761	CRD20TF1801T	RES , CARBON	1.8K /1/5W /F	1	EA
R762	CRD20TF2701T	RES , CARBON	2.7K /1/5W/F	1	EA
R763	CRD20TF3301T	RES , CARBON	3.3K /1/5W/F	1	EA
R764	CRD20TF5601T	RES , CARBON	5.6K /1/5W/F	1	EA
R765	CRD20TF7501T	RES , CARBON	7.5K /1/5W/F	1	EA
R781	CRD20TJ102T	RES , CARBON	1K OHM 1/5W J	1	EA
R782	CRD20TJ103T	RES , CARBON	10K OHM 1/5W J	1	EA
R783	CRD20TJ102T	RES , CARBON	1K OHM 1/5W J	1	EA
R784	CRD20TJ102T	RES , CARBON	1K OHM 1/5W J	1	EA
R786	CRD20TJ152T	RES , CARBON	1.5K OHM 1/5W J	1	EA
R787	CRD20TJ101T	RES , CARBON	100 OHM 1/5W J	1	EA
R791	CRD20TJ123T	RES , CARBON	12K OHM 1/5W J	1	EA
R805	CRD20TJ104T	RES , CARBON	100K OHM 1/5W J	1	EA
R806	CRD20TJ472T	RES , CARBON	4.7K OHM 1/5W J	1	EA
R824	CRD20TJ221T	RES , CARBON	220 OHM 1/5W J	1	EA
R825	CRD20TJ331T	RES , CARBON	330 OHM 1/5W J	1	EA
R828	CRD20TJ221T	RES , CARBON	220 OHM 1/5W J	1	EA
R829	CRD20TJ331T	RES , CARBON	330 OHM 1/5W J	1	EA
R864	CRD20TJ272T	RES , CARBON	2.7K OHM 1/5W J	1	EA
R865	CRD20TJ101T	RES , CARBON	100 OHM 1/5W J	1	EA
R866	CRD20TJ272T	RES , CARBON	2.7K OHM 1/5W J	1	EA
R869	CRD20TJ750T	RES , CARBON	75 OHM 1/5W J	1	EA
R871	CRD20TJ104T	RES , CARBON	100K OHM 1/5W J	1	EA
R872	CRD20TJ104T	RES , CARBON	100K OHM 1/5W J	1	EA
R873	CRD20TJ471T	RES , CARBON	470 OHM 1/5W J	1	EA
R874	CRD20TJ471T	RES , CARBON	470 OHM 1/5W J	1	EA
R875	CRD20TJ103T	RES , CARBON	10K OHM 1/5W J	1	EA
R876	CRD20TJ750T	RES , CARBON	75 OHM 1/5W J	1	EA
R877	CRD20TJ750T	RES , CARBON	75 OHM 1/5W J	1	EA
R878	CRD20TJ750T	RES , CARBON	75 OHM 1/5W J	1	EA
R892	CRD20TJ222T	RES , CARBON	2.2K OHM 1/5W J	1	EA
R893	CRD20TJ333T	RES , CARBON	33K OHM 1/5W J	1	EA
R895	CRD20TJ101T	RES , CARBON	100 OHM 1/5W J	1	EA
R896	CRD20TJ101T	RES , CARBON	100 OHM 1/5W J	1	EA
R897	CRD20TJ101T	RES , CARBON	100 OHM 1/5W J	1	EA
R898	CRD20TJ101T	RES , CARBON	100 OHM 1/5W J	1	EA
R899	CRD20TJ104T	RES , CARBON	100K OHM 1/5W J	1	EA
R900	CRD20TJ104T	RES , CARBON	100K OHM 1/5W J	1	EA
R901	CRD20TJ152T	RES , CARBON	1.5K OHM 1/5W J	1	EA
R902	CRD20TJ152T	RES , CARBON	1.5K OHM 1/5W J	1	EA
R903	CRD20TJ102T	RES , CARBON	1K OHM 1/5W J	1	EA
R904	CRD20TJ102T	RES , CARBON	1K OHM 1/5W J	1	EA
R905	CRD20TJ104T	RES , CARBON	100K OHM 1/5W J	1	EA
R906	CRD20TJ104T	RES , CARBON	100K OHM 1/5W J	1	EA
R907	CRD20TJ472T	RES , CARBON	4.7K OHM 1/5W J	1	EA
R908	CRD20TJ472T	RES , CARBON	4.7K OHM 1/5W J	1	EA
R909	CRD20TJ221T	RES , CARBON	220 OHM 1/5W J	1	EA
R910	CRD20TJ221T	RES , CARBON	220 OHM 1/5W J	1	EA
R911	CRD20TJ221T	RES , CARBON	220 OHM 1/5W J	1	EA
R912	CRD20TJ221T	RES , CARBON	220 OHM 1/5W J	1	EA
R913	CRD20TJ102T	RES , CARBON	1K OHM 1/5W J	1	EA
R915	CRD20TJ473T	RES , CARBON	47K OHM 1/5W J	1	EA
R918	CRD20TJ472T	RES , CARBON	4.7K OHM 1/5W J	1	EA
R919	CRD20TJ472T	RES , CARBON	4.7K OHM 1/5W J	1	EA
R920	CRD20TJ102T	RES , CARBON	1K OHM 1/5W J	1	EA
R921	CRD20TJ103T	RES , CARBON	10K OHM 1/5W J	1	EA
R922	CRD20TJ102T	RES , CARBON	1K OHM 1/5W J	1	EA
R923	CRD20TJ101T	RES , CARBON	100 OHM 1/5W J	1	EA
R924	CRD20TJ101T	RES , CARBON	100 OHM 1/5W J	1	EA
R926	CRD20TJ103T	RES , CARBON	10K OHM 1/5W J	1	EA
R931	CRD20TJ104T	RES , CARBON	100K OHM 1/5W J	1	EA
R934	CRD20TJ222T	RES , CARBON	2.2K OHM 1/5W J	1	EA
R935	CRD20TJ103T	RES , CARBON	10K OHM 1/5W J	1	EA

Ref. Designator	Part Number	Description		Qty	
FRONT PCB ASSY		**CUP12025**			
R936	CRD20TJ222T	RES , CARBON	2.2K OHM 1/5W J	1	EA
R937	CRD20TJ104T	RES , CARBON	100K OHM 1/5W J	1	EA
VR74	CSR2A037Z	ENCODER	ENCODER	1	EA
Miscellaneous					
S701	HST1A020ZT	SW , TACT	TACT SWITCH	1	EA
S702	HST1A020ZT	SW , TACT	TACT SWITCH	1	EA
S703	HST1A020ZT	SW , TACT	TACT SWITCH	1	EA
S704	HST1A020ZT	SW , TACT	TACT SWITCH	1	EA
S705	HST1A020ZT	SW , TACT	TACT SWITCH	1	EA
S706	HST1A020ZT	SW , TACT	TACT SWITCH	1	EA
S707	HST1A020ZT	SW , TACT	TACT SWITCH	1	EA
S708	HST1A020ZT	SW , TACT	TACT SWITCH	1	EA
S709	HST1A020ZT	SW , TACT	TACT SWITCH	1	EA
S711	HST1A020ZT	SW , TACT	TACT SWITCH	1	EA
S712	HST1A020ZT	SW , TACT	TACT SWITCH	1	EA
S713	HST1A020ZT	SW , TACT	TACT SWITCH	1	EA
S714	HST1A020ZT	SW , TACT	TACT SWITCH	1	EA
S715	HST1A020ZT	SW , TACT	TACT SWITCH	1	EA
L702	HLQ02C100KT	COIL , AXAIL		1	EA
BK71	CMD1A209	BRACKET , FLT	BRACKET	1	EA
BK72	CMD1A209	BRACKET , FLT	BRACKET	1	EA
BN10	CWZAVR155BN10	SHIELD WIRE ASS'Y(5P, 2MM, 350MM)	WIRE	1	EA
BN18	CWZAVR355BN18	SHIELD WIRE ASS'Y (5P, 500MM)	WIRE	1	EA
BN22	CWZAVR155BN22	WIRE ASS'Y(7P, 2MM, 500MM)	WIRE	1	EA
BN41	CWZAVR155BN41	SHIELD WIRE ASS'Y(7P, 2MM, 500MM)	WIRE	1	EA
BN81	CWB1C907200BM	WIRE ASS'Y	WIRE	1	EA
BN84	CWB2B905080EN	WIRE ASS'Y	WIRE	1	EA
BN85	CWB2B903100EW	WIRE ASS'Y	WIRE	1	EA
BN88	CWB2B905100EN	WIRE ASS'Y	WIRE	1	EA
BN89	CWB2B905100EN	WIRE ASS'Y	WIRE	1	EA
BN92	CWB2B907120EN	WIRE ASS'Y	WIRE	1	EA
CN72	CJP17GA117ZY	WAFER	WAFER	1	EA
CN84	CJP05GB46ZY	WAFER	WAFER	1	EA
CN85	CJP03GA19ZY	WAFER , STRAIGHT(3PIN)	WAFER	1	EA
CN86	CJP02GA89ZM	WAFER	WAFER	1	EA
CN88	CJP05GB46ZY	WAFER	WAFER	1	EA
CN89	CJP05GB46ZY	WAFER	WAFER	1	EA
CN92	CJP07GA19ZY	WAFER , STRAIGHT(7PIN)	WAFER	1	EA
ET03	CMD1A629	BRACKET , PCB	BRACKET	1	EA
FIP1	CFL17BT031GINK	F.I.P , AVR355	FIP(FUTABA)	1	EA
JK81	CJJ4M041Y	JACK , BOARD (COAX)	JACK	1	EA
JK82	HJSTORX177L	MODULE , OPTICAL(RX)	TORX177L	1	EA
JK83	CJJ2E026Z	JACK , HEADPHONE(SILVER PLATE)	JACK	1	EA
JK85	CJJ9M003Z	JACK , S-VIDEO	JACK	1	EA
JK86	CJJ4S023Y	JACK , BOARD	JACK	1	EA
JW82	CWE8202300RV	WIRE ASS'Y	WIRE	1	EA
JW83	CWE8202150RV	WIRE ASS'Y	WIRE	1	EA
JW84	CWE8202110RV	WIRE ASS'Y	WIRE	1	EA
JW88	CWE8202150RV	WIRE ASS'Y	WIRE	1	EA
RL45	CSL4A016ZU	RELAY , 12V 2C2P	RELAY	1	EA
SW1	CSH1A008ZV	SW , PUSH (MOMS)	SWITCH	1	EA
	CMC3A111	PLATE , EARTH	Plate, earth	1	EA
	CHG1A306	CUSHION	CUSHION	1	EA
MAIN PCB/HEATSINK		**(CUP12026)**			
Capacitors					
C501	CCEA1HH100T	CAP , ELECT	10UF 50V	1	EA
C502	CCEA1HH100T	CAP , ELECT	10UF 50V	1	EA
C503	CCEA1HH100T	CAP , ELECT	10UF 50V	1	EA
C504	CCEA1HH100T	CAP , ELECT	10UF 50V	1	EA
C505	CCEA1HH100T	CAP , ELECT	10UF 50V	1	EA

Ref. Designator	Part Number	Description		Qty	
MAIN PCB/HEATSINK		**(CUP12026)**			
C506	CCKT1H331KB	CAP , CERAMIC	330PF 50V K	1	EA
C507	CCBS1H331KBT	CAP , CERAMIC	330PF 50V	1	EA
C508	CCBS1H331KBT	CAP , CERAMIC	330PF 50V	1	EA
C509	CCKT1H331KB	CAP , CERAMIC	330PF 50V	1	EA
C510	CCBS1H331KBT	CAP , CERAMIC	330PF 50V	1	EA
C561	CCEA1CH101T	CAP , ELECT	100UF 16V	1	EA
C562	CCEA1CH101T	CAP , ELECT	100UF 16V	1	EA
C564	CCEA1CH101T	CAP , ELECT	100UF 16V	1	EA
C565	CCEA1CH101T	CAP , ELECT	100UF 16V	1	EA
C566	CCEA1CH101T	CAP , ELECT	100UF 16V	1	EA
C567	CCEA1CH101T	CAP , ELECT	100UF 16V	1	EA
C568	CCEA1CH101T	CAP , ELECT	100UF 16V	1	EA
C569	CCEA1CH101T	CAP , ELECT	100UF 16V	1	EA
C570	CCEA1CH101T	CAP , ELECT	100UF 16V	1	EA
C571	CCBS1H681KBT	CAP , CERAMIC	680PF 50V	1	EA
C572	CCBS1H681KBT	CAP , CERAMIC	680PF 50V	1	EA
C573	CCBS1H681KBT	CAP , CERAMIC	680PF 50V	1	EA
C574	CCBS1H681KBT	CAP , CERAMIC	680PF 50V	1	EA
C575	CCBS1H681KBT	CAP , CERAMIC	680PF 50V	1	EA
C601	CCCT1H120JC	CAP , CERAMIC	12PF 50V J	1	EA
C602	CCCT1H120JC	CAP , CERAMIC	12PF 50V J	1	EA
C603	CCCT1H120JC	CAP , CERAMIC	12PF 50V J	1	EA
C604	CCCT1H120JC	CAP , CERAMIC	12PF 50V J	1	EA
C605	CCCT1H120JC	CAP , CERAMIC	12PF 50V J	1	EA
C606	CCCT1H330JC	CAP , CERAMIC	33PF 50V J	1	EA
C607	CCCT1H330JC	CAP , CERAMIC	33PF 50V J	1	EA
C608	CCCT1H330JC	CAP , CERAMIC	33PF 50V J	1	EA
C609	CCCT1H330JC	CAP , CERAMIC	33PF 50V J	1	EA
C610	CCCT1H330JC	CAP , CERAMIC	33PF 50V J	1	EA
C681	CCEA1HH100T	CAP , ELECT	10UF 50V	1	EA
C682	CCEA1HH100T	CAP , ELECT	10UF 50V	1	EA
C683	CCEA1HH100T	CAP , ELECT	10UF 50V	1	EA
C684	CCEA1HH100T	CAP , ELECT	10UF 50V	1	EA
C685	CCEA1HH100T	CAP , ELECT	10UF 50V	1	EA
C721	CCKT1H221KB	CAP , CERAMIC	220PF 50V K	1	EA
C722	CCKT1H221KB	CAP , CERAMIC	220PF 50V K	1	EA
C723	CCKT1H221KB	CAP , CERAMIC	220PF 50V K	1	EA
C724	CCKT1H221KB	CAP , CERAMIC	220PF 50V K	1	EA
C725	CCKT1H221KB	CAP , CERAMIC	220PF 50V K	1	EA
C726	CCKT1H221KB	CAP , CERAMIC	220PF 50V K	1	EA
C727	CCKT1H221KB	CAP , CERAMIC	220PF 50V K	1	EA
C728	CCKT1H221KB	CAP , CERAMIC	220PF 50V K	1	EA
C801	CCEA1HH100T	CAP , ELECT	10UF 50V	1	EA
C802	CCEA1HH100T	CAP , ELECT	10UF 50V	1	EA
C803	CCCT1H330JC	CAP , CERAMIC	33PF 50V J	1	EA
C804	CCCT1H330JC	CAP , CERAMIC	33PF 50V J	1	EA
C805	CCCT1H120JC	CAP , CERAMIC	12PF 50V J	1	EA
C806	CCCT1H120JC	CAP , CERAMIC	12PF 50V J	1	EA
C811	CCEA1CH101T	CAP , ELECT	100UF 16V	1	EA
C812	CCEA1CH101T	CAP , ELECT	100UF 16V	1	EA
C813	CCEA1CH101T	CAP , ELECT	100UF 16V	1	EA
C814	CCEA1CH101T	CAP , ELECT	100UF 16V	1	EA
C815	CCKT1H331KB	CAP , CERAMIC	330PF 50V K	1	EA
C816	CCBS1H331KBT	CAP , CERAMIC	330PF 50V	1	EA
C817	CCEA1HH100T	CAP , ELECT	10UF 50V	1	EA
C818	CCEA1HH100T	CAP , ELECT	10UF 50V	1	EA
C819	CCBS1H681KBT	CAP , CERAMIC	680PF 50V	1	EA
C820	CCBS1H681KBT	CAP , CERAMIC	680PF 50V	1	EA
C900	HCQI1H473JZT	CAP , MYLAR	0.047UF 50V J	1	EA
C901	HCQI1H473JZT	CAP , MYLAR	0.047UF 50V J	1	EA
C905	CCFT1H223ZF	CAP , CERAMIC	0.022UF 50V Z	1	EA
C907	CCEA1CH101T	CAP , ELECT	100UF 16V	1	EA
C908	CCFT1H223ZF	CAP , CERAMIC	0.022UF 50V Z	1	EA
C910	HCQI1H473JZT	CAP , MYLAR	0.047UF 50V J	1	EA
C911	CCEA1CH471T	CAP , ELECT	470UF 16V	1	EA

Ref. Designator	Part Number	Description		Qty	
MAIN PCB/HEATSINK		**(CUP12026)**			
C912	CCEA1EH221T	CAP , ELECT	220UF 25V	1	EA
C913	CCFT1H104ZF	CAP , SEMICONDUCTOR	0.1UF 50V Z	1	EA
C914	HCQI1H473JZT	CAP , MYLAR	0.047UF 50V J	1	EA
C917	HCQI1H473JZT	CAP , MYLAR	0.047UF 50V J	1	EA
C918	HCQI1H473JZT	CAP , MYLAR	0.047UF 50V J	1	EA
C919	HCQI1H473JZT	CAP , MYLAR	0.047UF 50V J	1	EA
C924	CCFT1H104ZF	CAP , SEMICONDUCTOR	0.1UF 50V Z	1	EA
C925	CCFT1H104ZF	CAP , SEMICONDUCTOR	0.1UF 50V Z	1	EA
C932	CCEA1CH101T	CAP , ELECT	100UF 16V	1	EA
C933	CCEA1CH221T	CAP , ELECT	220UF 16V	1	EA
C934	CCFT1H223ZF	CAP , CERAMIC	0.022UF 50V Z	1	EA
C939	CCEA1HH4R7T	CAP , ELECT	4.7UF 50V	1	EA
C940	CCEA1AH471T	CAP , ELECT	470UF 10V	1	EA
C948	CCFT1H104ZF	CAP , SEMICONDUCTOR	0.1UF 50V Z	1	EA
C950	CCEA1AH471T	CAP , ELECT	470UF 10V	1	EA
C971	HCQI1H562JZT	CAP , MYLAR	5600PF 50V J	1	EA
C972	HCQI1H562JZT	CAP , MYLAR	5600PF 50V J	1	EA
C973	HCQI1H562JZT	CAP , MYLAR	5600PF 50V J	1	EA
C974	HCQI1H562JZT	CAP , MYLAR	5600PF 50V J	1	EA
C975	HCQI1H562JZT	CAP , MYLAR	5600PF 50V J	1	EA
C977	CCEA1HH3R3T	CAP , ELECT	3.3UF 50V	1	EA
C980	HCQI1H562JZT	CAP , MYLAR	5600PF 50V J	1	EA
C981	HCQI1H562JZT	CAP , MYLAR	5600PF 50V J	1	EA
C990	HCQI1H473JZT	CAP , MYLAR	0.047UF 50V J	1	EA
C991	CCEA1HH1R0T	CAP , ELECT	1UF 50V	1	EA
C992	HCQI1H473JZT	CAP , MYLAR	0.047UF 50V J	1	EA
C993	HCQI1H473JZT	CAP , MYLAR	0.047UF 50V J	1	EA
C994	HCQI1H473JZT	CAP , MYLAR	0.047UF 50V J	1	EA
C995	HCQI1H473JZT	CAP , MYLAR	0.047UF 50V J	1	EA
C996	HCQI1H473JZT	CAP , MYLAR	0.047UF 50V J	1	EA
C997	HCQI1H473JZT	CAP , MYLAR	0.047UF 50V J	1	EA
C999	CCFT1H223ZF	CAP , CERAMIC	0.022UF 50V Z	1	EA
C563	CCEA1CH101T	CAP , ELECT	100UF 16V	1	EA
C631	CCEA1JH101E	CAP , ELECT	100UF 63V	1	EA
C632	CCEA1JH101E	CAP , ELECT	100UF 63V	1	EA
C633	CCEA1JH101E	CAP , ELECT	100UF 63V	1	EA
C634	CCEA1JH101E	CAP , ELECT	100UF 63V	1	EA
C635	CCEA1JH101E	CAP , ELECT	100UF 63V	1	EA
C636	CCEA1JH101E	CAP , ELECT	100UF 63V	1	EA
C637	CCEA1JH101E	CAP , ELECT	100UF 63V	1	EA
C638	CCEA1JH101E	CAP , ELECT	100UF 63V	1	EA
C639	CCEA1JH101E	CAP , ELECT	100UF 63V	1	EA
C640	CCEA1JH101E	CAP , ELECT	100UF 63V	1	EA
C807	CCEA1JH101E	CAP , ELECT	100UF 63V	1	EA
C808	CCEA1JH101E	CAP , ELECT	100UF 63V	1	EA
C809	CCEA1JH101E	CAP , ELECT	100UF 63V	1	EA
C810	CCEA1JH101E	CAP , ELECT	100UF 63V	1	EA
C902	CCET50VKL4822NK	CAP , ELECT	8200UF/50V	1	EA
C904	KCKDKS472ME	CAP , CERAMIC(X1/Y2/SC)	0.0047UF/2.5KV	1	EA
C906	CCEA1EH102E	CAP , ELECT	1000UF 25V	1	EA
C909	CCET50VKL4822NK	CAP , ELECT	8200UF/50V	1	EA
C915	CCET50VKL4103NK	CAP , ELECT	10000UF/50V	1	EA
C916	CCET50VKL4103NK	CAP , ELECT	10000UF/50V	1	EA
Semiconductors					
D501	CVD1SS133MT	DIODE	1SS133	1	EA
D502	CVD1SS133MT	DIODE	1SS133	1	EA
D503	CVD1SS133MT	DIODE	1SS133	1	EA
D504	CVD1SS133MT	DIODE	1SS133	1	EA
D505	CVD1SS133MT	DIODE	1SS133	1	EA
D581	CVD1SS133MT	DIODE	1SS133	1	EA
D582	CVD1SS133MT	DIODE	1SS133	1	EA
D583	CVD1SS133MT	DIODE	1SS133	1	EA
D584	CVD1SS133MT	DIODE	1SS133	1	EA

Ref. Designator	Part Number	Description		Qty	
MAIN PCB/HEATSINK		**(CUP12026)**			
D585	CVD1SS133MT	DIODE	1SS133	1	EA
D801	CVD1SS133MT	DIODE	1SS133	1	EA
D802	CVD1SS133MT	DIODE	1SS133	1	EA
D803	CVD1SS133MT	DIODE	1SS133	1	EA
D804	CVD1SS133MT	DIODE	1SS133	1	EA
D901	CVD1N4003SRT	DIODE , RECT	1N4003	1	EA
D902	CVD1SS133MT	DIODE	1SS133	1	EA
D911	CVD1SS133MT	DIODE	1SS133	1	EA
D912	CVD1SS133MT	DIODE	1SS133	1	EA
D914	CVD1SS133MT	DIODE	1SS133	1	EA
D917	CVD1SS133MT	DIODE	1SS133	1	EA
D953	CVD1SS133MT	DIODE	1SS133	1	EA
D954	CVD1N4003SRT	DIODE , RECT	1N4003	1	EA
D955	CVD1N4003SRT	DIODE , RECT	1N4003	1	EA
D956	CVD1N4003SRT	DIODE , RECT	1N4003	1	EA
D957	CVD1N4003SRT	DIODE , RECT	1N4003	1	EA
D961	CVD1N4003ST	DIODE , RECT	1N4003	1	EA
D962	CVD1N4003SRT	DIODE , RECT	1N4003	1	EA
D963	CVD1N4003SRT	DIODE , RECT	1N4003	1	EA
D964	CVD1SS133MT	DIODE	1SS133	1	EA
D967	CVD1SS133MT	DIODE	1SS133	1	EA
D968	CVD1SS133MT	DIODE	1SS133	1	EA
D969	CVD1SS133MT	DIODE	1SS133	1	EA
D971	CVD1SS133MT	DIODE	1SS133	1	EA
D972	CVD1SS133MT	DIODE	1SS133	1	EA
D973	CVD1SS133MT	DIODE	1SS133	1	EA
D974	CVD1SS133MT	DIODE	1SS133	1	EA
D975	CVD1SS133MT	DIODE	1SS133	1	EA
D976	CVD1SS133MT	DIODE	1SS133	1	EA
IC97	HVIRE5VT28CATZ	I.C , RESET	RESET	1	EA
Q501	HVTKTA1268GRT	TRANSISTOR PNP	KTA1268GR	1	EA
Q502	HVTKTA1268GRT	TRANSISTOR PNP	KTA1268GR	1	EA
Q503	HVTKTA1268GRT	TRANSISTOR PNP	KTA1268GR	1	EA
Q504	HVTKTA1268GRT	TRANSISTOR PNP	KTA1268GR	1	EA
Q505	HVTKTA1268GRT	TRANSISTOR PNP	KTA1268GR	1	EA
Q511	HVTKTC3200GRT	TRANSISTOR NPN	KTC3200GR	1	EA
Q512	HVTKTC3200GRT	TRANSISTOR NPN	KTC3200GR	1	EA
Q513	HVTKTC3200GRT	TRANSISTOR NPN	KTC3200GR	1	EA
Q514	HVTKTC3200GRT	TRANSISTOR NPN	KTC3200GR	1	EA
Q515	HVTKTC3200GRT	TRANSISTOR NPN	KTC3200GR	1	EA
Q516	HVTKTC3200GRT	TRANSISTOR NPN	KTC3200GR	1	EA
Q517	HVTKTC3200GRT	TRANSISTOR NPN	KTC3200GR	1	EA
Q518	HVTKTC3200GRT	TRANSISTOR NPN	KTC3200GR	1	EA
Q519	HVTKTC3200GRT	TRANSISTOR NPN	KTC3200GR	1	EA
Q520	HVTKTC3200GRT	TRANSISTOR NPN	KTC3200GR	1	EA
Q541	HVTKTC3198YT	TRANSISTOR NPN	KTC3198Y	1	EA
Q542	HVTKTC3198YT	TRANSISTOR NPN	KTC3198Y	1	EA
Q543	HVTKTC3198YT	TRANSISTOR NPN	KTC3198Y	1	EA
Q544	HVTKTC3198YT	TRANSISTOR NPN	KTC3198Y	1	EA
Q545	HVTKTC3198YT	TRANSISTOR NPN	KTC3198Y	1	EA
Q556	HVTKTC3200GRT	TRANSISTOR NPN	KTC3200GR	1	EA
Q557	HVTKTC3200GRT	TRANSISTOR NPN	KTC3200GR	1	EA
Q558	HVTKTC3200GRT	TRANSISTOR NPN	KTC3200GR	1	EA
Q559	HVTKTC3200GRT	TRANSISTOR NPN	KTC3200GR	1	EA
Q560	HVTKTC3200GRT	TRANSISTOR NPN	KTC3200GR	1	EA
Q561	HVTKTC3200GRT	TRANSISTOR NPN	KTC3200GR	1	EA
Q562	HVTKTC3200GRT	TRANSISTOR NPN	KTC3200GR	1	EA
Q563	HVTKTC3200GRT	TRANSISTOR NPN	KTC3200GR	1	EA
Q564	HVTKTC3200GRT	TRANSISTOR NPN	KTC3200GR	1	EA
Q565	HVTKTC3200GRT	TRANSISTOR NPN	KTC3200GR	1	EA
Q601	HVTKTA1268GRT	TRANSISTOR PNP	KTA1268GR	1	EA
Q602	HVTKTA1268GRT	TRANSISTOR PNP	KTA1268GR	1	EA
Q603	HVTKTA1268GRT	TRANSISTOR PNP	KTA1268GR	1	EA
Q604	HVTKTA1268GRT	TRANSISTOR PNP	KTA1268GR	1	EA
Q605	HVTKTA1268GRT	TRANSISTOR PNP	KTA1268GR	1	EA

Ref. Designator	Part Number	Description		Qty	
MAIN PCB/HEATSINK		**(CUP12026)**			
Q681	HVTKSC2785YT	TRANSISTOR NPN	KSC2785Y	1	EA
Q682	HVTKSC2785YT	TRANSISTOR NPN	KSC2785Y	1	EA
Q683	HVTKSC2785YT	TRANSISTOR NPN	KSC2785Y	1	EA
Q684	HVTKSC2785YT	TRANSISTOR NPN	KSC2785Y	1	EA
Q685	HVTKSC2785YT	TRANSISTOR NPN	KSC2785Y	1	EA
Q801	HVTKSC2785YT	TRANSISTOR NPN	KSC2785Y	1	EA
Q802	HVTKSC2785YT	TRANSISTOR NPN	KSC2785Y	1	EA
Q812	HVTKTA1268GRT	TRANSISTOR PNP	KTA1268GR	1	EA
Q813	HVTKTC3200GRT	TRANSISTOR NPN	KTC3200GR	1	EA
Q814	HVTKTA1268GRT	TRANSISTOR PNP	KTA1268GR	1	EA
Q815	HVTKTC3200GRT	TRANSISTOR NPN	KTC3200GR	1	EA
Q816	HVTKTA1268GRT	TRANSISTOR PNP	KTA1268GR	1	EA
Q817	HVTKTA1268GRT	TRANSISTOR PNP	KTA1268GR	1	EA
Q818	HVTKTC3200GRT	TRANSISTOR NPN	KTC3200GR	1	EA
Q819	HVTKTC3200GRT	TRANSISTOR NPN	KTC3200GR	1	EA
Q820	HVTKTC3200GRT	TRANSISTOR NPN	KTC3200GR	1	EA
Q821	HVTKTC3200GRT	TRANSISTOR NPN	KTC3200GR	1	EA
Q822	HVTKTC3200GRT	TRANSISTOR NPN	KTC3200GR	1	EA
Q823	HVTKTC3200GRT	TRANSISTOR NPN	KTC3200GR	1	EA
Q824	HVTKTC3198YT	TRANSISTOR NPN	KTC3198Y	1	EA
Q825	HVTKTC3198YT	TRANSISTOR NPN	KTC3198Y	1	EA
Q901	HVTKSC2785YT	TRANSISTOR NPN	KSC2785Y	1	EA
Q911	HVTKTA1271YT	TRANSISTOR PNP	KTA1271Y	1	EA
Q912	HVTKTA1271YT	TRANSISTOR PNP	KTA1271Y	1	EA
Q913	HVTKTA1271YT	TRANSISTOR PNP	KTA1271Y	1	EA
Q914	HVTKTA1271YT	TRANSISTOR PNP	KTA1271Y	1	EA
Q915	HVTKSC2785YT	TRANSISTOR NPN	KSC2785Y	1	EA
Q916	HVTKSC2785YT	TRANSISTOR NPN	KSC2785Y	1	EA
Q917	HVTKSC2785YT	TRANSISTOR NPN	KSC2785Y	1	EA
Q918	HVTKSC2785YT	TRANSISTOR NPN	KSC2785Y	1	EA
Q938	HVTKRA107MT	TRANSISTOR PNP	KRA107M	1	EA
Q939	HVTKRA107MT	TRANSISTOR PNP	KRA107M	1	EA
Q941	HVTKSC2785YT	TRANSISTOR NPN	KSC2785Y	1	EA
Q942	HVTKSC2785YT	TRANSISTOR NPN	KSC2785Y	1	EA
Q943	HVTKSC2785YT	TRANSISTOR NPN	KSC2785Y	1	EA
Q951	HVTKRC107MT	TRANSISTOR NPN	KRC107M	1	EA
Q952	HVTKRA107MT	TRANSISTOR PNP	KRA107M	1	EA
Q960	HVTKRC107MT	TRANSISTOR NPN	KRC107M	1	EA
Q961	HVTKTA1024YT	TRANSISTOR PNP	KTA1024Y	1	EA
Q991	HVTKRC107MT	TRANSISTOR NPN	KRC107M	1	EA
Q992	HVTKRA107MT	TRANSISTOR NPN	KRA107M	1	EA
Q997	HVTKRA107MT	TRANSISTOR PNP	KRA107M	1	EA
Q998	HVTKRC107MT	TRANSISTOR NPN	KRC107M	1	EA
Q652	HVT2SB1560-OKM	TRANSISTOR , POWER, PNP	2SB1560	1	EA
Q653	HVT2SB1560-OKM	TRANSISTOR , POWER, PNP	2SB1560	1	EA
Q654	HVT2SB1560-OKM	TRANSISTOR , POWER, PNP	2SB1560	1	EA
Q655	HVT2SB1560-OKM	TRANSISTOR , POWER, PNP	2SB1560	1	EA
Q657	HVT2SD2390-OKM	TRANSISTOR , POWER, NPN	2SD2390	1	EA
Q658	HVT2SD2390-OKM	TRANSISTOR , POWER, NPN	2SD2390	1	EA
Q659	HVT2SD2390-OKM	TRANSISTOR , POWER, NPN	2SD2390	1	EA
Q660	HVT2SD2390-OKM	TRANSISTOR , POWER, NPN	2SD2390	1	EA
Q661	HVT2SB1560-OKM	TRANSISTOR , POWER, PNP	2SB1560	1	EA
Q670	HVT2SD2390-OKM	TRANSISTOR , POWER, NPN	2SD2390	1	EA
Q803	HVT2SD2390-OKM	TRANSISTOR , POWER, NPN	2SD2390	1	EA
Q804	HVT2SB1560-OKM	TRANSISTOR , POWER, PNP	2SB1560	1	EA
Q805	HVT2SD2390-OKM	TRANSISTOR , POWER, NPN	2SD2390	1	EA
Q807	HVT2SB1560-OKM	TRANSISTOR , POWER, PNP	2SB1560	1	EA
Q858	HVT2SA1360O	TRANSISTOR , POWER, PNP	2SA1360O	1	EA
Q871	HVT2SA1360O	TRANSISTOR , POWER, PNP	2SA1360O	1	EA
Q872	HVT2SA1360O	TRANSISTOR , POWER, PNP	2SA1360O	1	EA
Q874	HVT2SA1360O	TRANSISTOR , POWER, PNP	2SA1360O	1	EA
Q875	HVT2SA1360O	TRANSISTOR , POWER, PNP	2SA1360O	1	EA
Q876	HVT2SA1360O	TRANSISTOR , POWER, PNP	2SA1360O	1	EA
Q877	HVT2SA1360O	TRANSISTOR , POWER, PNP	2SA1360O	1	EA
Q881	HVT2SC3423O	TRANSISTOR , POWER, NPN	2SC3423O	1	EA

Ref. Designator	Part Number	Description		Qty	
MAIN PCB/HEATSINK		**(CUP12026)**			
Q882	HVT2SC3423O	TRANSISTOR , POWER, NPN	2SC3423O	1	EA
Q883	HVT2SC3423O	TRANSISTOR , POWER, NPN	2SC3423O	1	EA
Q884	HVT2SC3423O	TRANSISTOR , POWER, NPN	2SC3423O	1	EA
Q885	HVT2SC3423O	TRANSISTOR , POWER, NPN	2SC3423O	1	EA
Q886	HVT2SC3423O	TRANSISTOR , POWER, NPN	2SC3423O	1	EA
Q887	HVT2SC3423O	TRANSISTOR , POWER, NPN	2SC3423O	1	EA
D979	CVDZJ5.1BT	DIODE , ZENER	ZJ5.1B 1/2W	1	EA
Resistors					
R501	CRD20TJ433T	RES , CARBON	43K OHM 1/5W J	1	EA
R502	CRD20TJ433T	RES , CARBON	43K OHM 1/5W J	1	EA
R503	CRD20TJ433T	RES , CARBON	43K OHM 1/5W J	1	EA
R504	CRD20TJ433T	RES , CARBON	43K OHM 1/5W J	1	EA
R505	CRD20TJ433T	RES , CARBON	43K OHM 1/5W J	1	EA
R506	CRD20TJ333T	RES , CARBON	33K OHM 1/5W J	1	EA
R507	CRD20TJ333T	RES , CARBON	33K OHM 1/5W J	1	EA
R508	CRD20TJ333T	RES , CARBON	33K OHM 1/5W J	1	EA
R509	CRD20TJ333T	RES , CARBON	33K OHM 1/5W J	1	EA
R510	CRD20TJ333T	RES , CARBON	33K OHM 1/5W J	1	EA
R511	CRD20TJ152T	RES , CARBON	1.5K OHM 1/5W J	1	EA
R512	CRD20TJ152T	RES , CARBON	1.5K OHM 1/5W J	1	EA
R513	CRD20TJ152T	RES , CARBON	1.5K OHM 1/5W J	1	EA
R514	CRD20TJ152T	RES , CARBON	1.5K OHM 1/5W J	1	EA
R515	CRD20TJ152T	RES , CARBON	1.5K OHM 1/5W J	1	EA
R516	CRD20TJ152T	RES , CARBON	1.5K OHM 1/5W J	1	EA
R517	CRD20TJ152T	RES , CARBON	1.5K OHM 1/5W J	1	EA
R518	CRD20TJ152T	RES , CARBON	1.5K OHM 1/5W J	1	EA
R519	CRD20TJ152T	RES , CARBON	1.5K OHM 1/5W J	1	EA
R520	CRD20TJ152T	RES , CARBON	1.5K OHM 1/5W J	1	EA
R521	CRD20TJ471T	RES , CARBON	470 OHM 1/5W J	1	EA
R522	CRD20TJ471T	RES , CARBON	470 OHM 1/5W J	1	EA
R523	CRD20TJ471T	RES , CARBON	470 OHM 1/5W J	1	EA
R524	CRD20TJ471T	RES , CARBON	470 OHM 1/5W J	1	EA
R525	CRD20TJ471T	RES , CARBON	470 OHM 1/5W J	1	EA
R531	CRD20TJ221T	RES , CARBON	220 OHM 1/5W J	1	EA
R532	CRD20TJ221T	RES , CARBON	220 OHM 1/5W J	1	EA
R533	CRD20TJ221T	RES , CARBON	220 OHM 1/5W J	1	EA
R534	CRD20TJ221T	RES , CARBON	220 OHM 1/5W J	1	EA
R535	CRD20TJ221T	RES , CARBON	220 OHM 1/5W J	1	EA
R536	CRD20TJ221T	RES , CARBON	220 OHM 1/5W J	1	EA
R537	CRD20TJ221T	RES , CARBON	220 OHM 1/5W J	1	EA
R538	CRD20TJ221T	RES , CARBON	220 OHM 1/5W J	1	EA
R539	CRD20TJ221T	RES , CARBON	220 OHM 1/5W J	1	EA
R540	CRD20TJ221T	RES , CARBON	220 OHM 1/5W J	1	EA
R541	CRD20TJ271T	RES , CARBON	270 OHM 1/5W J	1	EA
R542	CRD20TJ271T	RES , CARBON	270 OHM 1/5W J	1	EA
R543	CRD20TJ271T	RES , CARBON	270 OHM 1/5W J	1	EA
R544	CRD20TJ271T	RES , CARBON	270 OHM 1/5W J	1	EA
R545	CRD20TJ271T	RES , CARBON	270 OHM 1/5W J	1	EA
R556	CRD20TJ273T	RES , CARBON	27K OHM 1/5W J	1	EA
R557	CRD20TJ273T	RES , CARBON	27K OHM 1/5W J	1	EA
R558	CRD20TJ273T	RES , CARBON	27K OHM 1/5W J	1	EA
R559	CRD20TJ273T	RES , CARBON	27K OHM 1/5W J	1	EA
R560	CRD20TJ273T	RES , CARBON	27K OHM 1/5W J	1	EA
R561	CRD20TJ162T	RES , CARBON	1.6K OHM 1/5W J	1	EA
R562	CRD20TJ162T	RES , CARBON	1.6K OHM 1/5W J	1	EA
R563	CRD20TJ162T	RES , CARBON	1.6K OHM 1/5W J	1	EA
R564	CRD20TJ162T	RES , CARBON	1.6K OHM 1/5W J	1	EA
R565	CRD20TJ162T	RES , CARBON	1.6K OHM 1/5W J	1	EA
R566	CRD20TJ561T	RES , CARBON	560 OHM 1/5W J	1	EA
R567	CRD20TJ561T	RES , CARBON	560 OHM 1/5W J	1	EA
R568	CRD20TJ561T	RES , CARBON	560 OHM 1/5W J	1	EA
R569	CRD20TJ561T	RES , CARBON	560 OHM 1/5W J	1	EA
R570	CRD20TJ561T	RES , CARBON	560 OHM 1/5W J	1	EA

Ref. Designator	Part Number	Description		Qty	
MAIN PCB/HEATSINK		**(CUP12026)**			
R571	CRD20TJ561T	RES , CARBON	560 OHM 1/5W J	1	EA
R572	CRD20TJ561T	RES , CARBON	560 OHM 1/5W J	1	EA
R573	CRD20TJ561T	RES , CARBON	560 OHM 1/5W J	1	EA
R574	CRD20TJ561T	RES , CARBON	560 OHM 1/5W J	1	EA
R575	CRD20TJ561T	RES , CARBON	560 OHM 1/5W J	1	EA
R576	CRD20TJ100T	RES , CARBON	10 OHM 1/5W J	1	EA
R577	CRD20TJ100T	RES , CARBON	10 OHM 1/5W J	1	EA
R578	CRD20TJ100T	RES , CARBON	10 OHM 1/5W J	1	EA
R579	CRD20TJ100T	RES , CARBON	10 OHM 1/5W J	1	EA
R580	CRD20TJ100T	RES , CARBON	10 OHM 1/5W J	1	EA
R581	CRD20TJ561T	RES , CARBON	560 OHM 1/5W J	1	EA
R582	CRD20TJ561T	RES , CARBON	560 OHM 1/5W J	1	EA
R583	CRD20TJ561T	RES , CARBON	560 OHM 1/5W J	1	EA
R584	CRD20TJ561T	RES , CARBON	560 OHM 1/5W J	1	EA
R585	CRD20TJ561T	RES , CARBON	560 OHM 1/5W J	1	EA
R586	CRD20TJ561T	RES , CARBON	560 OHM 1/5W J	1	EA
R587	CRD20TJ561T	RES , CARBON	560 OHM 1/5W J	1	EA
R588	CRD20TJ561T	RES , CARBON	560 OHM 1/5W J	1	EA
R589	CRD20TJ561T	RES , CARBON	560 OHM 1/5W J	1	EA
R590	CRD20TJ561T	RES , CARBON	560 OHM 1/5W J	1	EA
R591	CRD20TJ561T	RES , CARBON	560 OHM 1/5W J	1	EA
R592	CRD20TJ561T	RES , CARBON	560 OHM 1/5W J	1	EA
R593	CRD20TJ561T	RES , CARBON	560 OHM 1/5W J	1	EA
R594	CRD20TJ561T	RES , CARBON	560 OHM 1/5W J	1	EA
R595	CRD20TJ561T	RES , CARBON	560 OHM 1/5W J	1	EA
R596	CRD20TJ561T	RES , CARBON	560 OHM 1/5W J	1	EA
R597	CRD20TJ561T	RES , CARBON	560 OHM 1/5W J	1	EA
R598	CRD20TJ561T	RES , CARBON	560 OHM 1/5W J	1	EA
R599	CRD20TJ561T	RES , CARBON	560 OHM 1/5W J	1	EA
R600	CRD20TJ561T	RES , CARBON	560 OHM 1/5W J	1	EA
R601	CRD20TJ223T	RES , CARBON	22K OHM 1/5W J	1	EA
R602	CRD20TJ223T	RES , CARBON	22K OHM 1/5W J	1	EA
R603	CRD20TJ223T	RES , CARBON	22K OHM 1/5W J	1	EA
R604	CRD20TJ223T	RES , CARBON	22K OHM 1/5W J	1	EA
R605	CRD20TJ223T	RES , CARBON	22K OHM 1/5W J	1	EA
R606	CRD20TJ223T	RES , CARBON	22K OHM 1/5W J	1	EA
R607	CRD20TJ223T	RES , CARBON	22K OHM 1/5W J	1	EA
R608	CRD20TJ223T	RES , CARBON	22K OHM 1/5W J	1	EA
R609	CRD20TJ223T	RES , CARBON	22K OHM 1/5W J	1	EA
R610	CRD20TJ223T	RES , CARBON	22K OHM 1/5W J	1	EA
R611	CRD20TJ100T	RES , CARBON	10 OHM 1/5W J	1	EA
R612	CRD20TJ100T	RES , CARBON	10 OHM 1/5W J	1	EA
R631	CRD25FJ180T	RES , CARBON	18 OHM 1/5W J	1	EA
R632	CRD25FJ180T	RES , CARBON	18 OHM 1/5W J	1	EA
R633	CRD25FJ180T	RES , CARBON	18 OHM 1/5W J	1	EA
R634	CRD25FJ180T	RES , CARBON	18 OHM 1/5W J	1	EA
R635	CRD25FJ180T	RES , CARBON	18 OHM 1/5W J	1	EA
R636	CRD25FJ180T	RES , CARBON	18 OHM 1/5W J	1	EA
R637	CRD25FJ180T	RES , CARBON	18 OHM 1/5W J	1	EA
R638	CRD25FJ180T	RES , CARBON	18 OHM 1/5W J	1	EA
R639	CRD25FJ180T	RES , CARBON	18 OHM 1/5W J	1	EA
R640	CRD25FJ180T	RES , CARBON	18 OHM 1/5W J	1	EA
R646	CRD25FJ3R3T	RES , CARBON	3.3 OHM 1/4W J	1	EA
R647	CRD25FJ3R3T	RES , CARBON	3.3 OHM 1/4W J	1	EA
R648	CRD25FJ3R3T	RES , CARBON	3.3 OHM 1/4W J	1	EA
R649	CRD25FJ3R3T	RES , CARBON	3.3 OHM 1/4W J	1	EA
R650	CRD25FJ3R3T	RES , CARBON	3.3 OHM 1/4W J	1	EA
R651	CRD25FJ3R3T	RES , CARBON	3.3 OHM 1/4W J	1	EA
R652	CRD25FJ3R3T	RES , CARBON	3.3 OHM 1/4W J	1	EA
R653	CRD25FJ3R3T	RES , CARBON	3.3 OHM 1/4W J	1	EA
R654	CRD25FJ3R3T	RES , CARBON	3.3 OHM 1/4W J	1	EA
R655	CRD25FJ3R3T	RES , CARBON	3.3 OHM 1/4W J	1	EA
R666	CRD25TJ470T	RES , CARBON	47 OHM 1/5W J	1	EA
R667	CRD25TJ470T	RES , CARBON	47 OHM 1/5W J	1	EA
R668	CRD25TJ470T	RES , CARBON	47 OHM 1/5W J	1	EA

Ref. Designator	Part Number	Description		Qty	
MAIN PCB/HEATSINK		**(CUP12026)**			
R669	CRD25TJ470T	RES , CARBON	47 OHM 1/5W J	1	EA
R670	CRD25TJ470T	RES , CARBON	47 OHM 1/5W J	1	EA
R671	CRD20TJ472T	RES , CARBON	4.7K OHM 1/5W J	1	EA
R672	CRD20TJ472T	RES , CARBON	4.7K OHM 1/5W J	1	EA
R673	CRD20TJ472T	RES , CARBON	4.7K OHM 1/5W J	1	EA
R674	CRD20TJ472T	RES , CARBON	4.7K OHM 1/5W J	1	EA
R675	CRD20TJ472T	RES , CARBON	4.7K OHM 1/5W J	1	EA
R676	CRD25TJ182T	RES , CARBON	1.8K OHM 1/5W J	1	EA
R677	CRD25TJ182T	RES , CARBON	1.8K OHM 1/5W J	1	EA
R678	CRD25TJ182T	RES , CARBON	1.8K OHM 1/5W J	1	EA
R679	CRD25TJ182T	RES , CARBON	1.8K OHM 1/5W J	1	EA
R680	CRD25TJ182T	RES , CARBON	1.8K OHM 1/5W J	1	EA
R681	CRD20TJ562T	RES , CARBON	5.6K OHM 1/5W J	1	EA
R682	CRD20TJ562T	RES , CARBON	5.6K OHM 1/5W J	1	EA
R683	CRD20TJ562T	RES , CARBON	5.6K OHM 1/5W J	1	EA
R684	CRD20TJ562T	RES , CARBON	5.6K OHM 1/5W J	1	EA
R685	CRD20TJ562T	RES , CARBON	5.6K OHM 1/5W J	1	EA
R686	CRD20TJ103T	RES , CARBON	10K OHM 1/5W J	1	EA
R687	CRD20TJ103T	RES , CARBON	10K OHM 1/5W J	1	EA
R688	CRD20TJ103T	RES , CARBON	10K OHM 1/5W J	1	EA
R689	CRD20TJ103T	RES , CARBON	10K OHM 1/5W J	1	EA
R690	CRD20TJ103T	RES , CARBON	10K OHM 1/5W J	1	EA
R696	CRD25TJ470T	RES , CARBON	47 OHM 1/4W J	1	EA
R697	CRD25TJ470T	RES , CARBON	47 OHM 1/4W J	1	EA
R698	CRD25TJ470T	RES , CARBON	47 OHM 1/4W J	1	EA
R699	CRD25TJ470T	RES , CARBON	47 OHM 1/4W J	1	EA
R700	CRD25TJ470T	RES , CARBON	47 OHM 1/4W J	1	EA
R701	USE BUSS WIRE	WIRE , COPPER	SN95/PB5 , 0.6	1	EA
R702	USE BUSS WIRE	WIRE , COPPER	SN95/PB5 , 0.6	1	EA
R703	USE BUSS WIRE	WIRE , COPPER	SN95/PB5 , 0.6	1	EA
R704	USE BUSS WIRE	WIRE , COPPER	SN95/PB5 , 0.6	1	EA
R705	USE BUSS WIRE	WIRE , COPPER	SN95/PB5 , 0.6	1	EA
R706	USE BUSS WIRE	WIRE , COPPER	SN95/PB5 , 0.6	1	EA
R707	USE BUSS WIRE	WIRE , COPPER	SN95/PB5 , 0.6	1	EA
R708	USE BUSS WIRE	WIRE , COPPER	SN95/PB5 , 0.6	1	EA
R771	CRD20TJ750T	RES , CARBON	75 OHM 1/5W J	1	EA
R772	CRD20TJ750T	RES , CARBON	75 OHM 1/5W J	1	EA
R773	CRD20TJ750T	RES , CARBON	75 OHM 1/5W J	1	EA
R774	CRD20TJ750T	RES , CARBON	75 OHM 1/5W J	1	EA
R775	CRD20TJ750T	RES , CARBON	75 OHM 1/5W J	1	EA
R776	CRD20TJ750T	RES , CARBON	75 OHM 1/5W J	1	EA
R777	CRD20TJ750T	RES , CARBON	75 OHM 1/5W J	1	EA
R781	CRD20TJ750T	RES , CARBON	75 OHM 1/5W J	1	EA
R782	CRD20TJ750T	RES , CARBON	75 OHM 1/5W J	1	EA
R783	CRD20TJ750T	RES , CARBON	75 OHM 1/5W J	1	EA
R784	CRD20TJ750T	RES , CARBON	75 OHM 1/5W J	1	EA
R785	CRD20TJ750T	RES , CARBON	75 OHM 1/5W J	1	EA
R786	CRD20TJ750T	RES , CARBON	75 OHM 1/5W J	1	EA
R787	CRD20TJ750T	RES , CARBON	75 OHM 1/5W J	1	EA
R801	CRD20TJ103T	RES , CARBON	10K OHM 1/5W J	1	EA
R802	CRD20TJ103T	RES , CARBON	10K OHM 1/5W J	1	EA
R803	CRD20TJ562T	RES , CARBON	5.6K OHM 1/5W J	1	EA
R804	CRD20TJ562T	RES , CARBON	5.6K OHM 1/5W J	1	EA
R805	CRD20TJ472T	RES , CARBON	4.7K OHM 1/5W J	1	EA
R807	CRD20TJ472T	RES , CARBON	4.7K OHM 1/5W J	1	EA
R808	CRD25TJ182T	RES , CARBON	1.8K OHM 1/4W J	1	EA
R809	CRD25TJ182T	RES , CARBON	1.8K OHM 1/4W J	1	EA
R812	CRD25TJ470T	RES , CARBON	47 OHM 1/4W J	1	EA
R813	CRD25TJ470T	RES , CARBON	47 OHM 1/4W J	1	EA
R814	CRD25TJ470T	RES , CARBON	47 OHM 1/4W J	1	EA
R815	CRD25TJ470T	RES , CARBON	47 OHM 1/4W J	1	EA
R817	CRD25FJ3R3T	RES , CARBON	3.3 OHM 1/4W J	1	EA
R818	CRD25FJ3R3T	RES , CARBON	3.3 OHM 1/4W J	1	EA
R819	CRD25FJ3R3T	RES , CARBON	3.3 OHM 1/4W J	1	EA
R820	CRD25FJ3R3T	RES , CARBON	3.3 OHM 1/4W J	1	EA

Ref. Designator	Part Number	Description		Qty	
MAIN PCB/HEATSINK		**(CUP12026)**			
R821	CRD25FJ180T	RES , CARBON	18 OHM 1/4W J	1	EA
R822	CRD25FJ180T	RES , CARBON	18 OHM 1/4W J	1	EA
R823	CRD25FJ180T	RES , CARBON	18 OHM 1/4W J	1	EA
R824	CRD25FJ180T	RES , CARBON	18 OHM 1/4W J	1	EA
R830	CRD20TJ223T	RES , CARBON	22K OHM 1/5W J	1	EA
R831	CRD20TJ223T	RES , CARBON	22K OHM 1/5W J	1	EA
R832	CRD20TJ223T	RES , CARBON	22K OHM 1/5W J	1	EA
R833	CRD20TJ223T	RES , CARBON	22K OHM 1/5W J	1	EA
R834	CRD20TJ561T	RES , CARBON	560 OHM 1/5W J	1	EA
R835	CRD20TJ561T	RES , CARBON	560 OHM 1/5W J	1	EA
R836	CRD20TJ561T	RES , CARBON	560 OHM 1/5W J	1	EA
R837	CRD20TJ561T	RES , CARBON	560 OHM 1/5W J	1	EA
R838	CRD20TJ561T	RES , CARBON	560 OHM 1/5W J	1	EA
R839	CRD20TJ561T	RES , CARBON	560 OHM 1/5W J	1	EA
R840	CRD20TJ561T	RES , CARBON	560 OHM 1/5W J	1	EA
R841	CRD20TJ561T	RES , CARBON	560 OHM 1/5W J	1	EA
R842	CRD20TJ561T	RES , CARBON	560 OHM 1/5W J	1	EA
R843	CRD20TJ561T	RES , CARBON	560 OHM 1/5W J	1	EA
R844	CRD20TJ561T	RES , CARBON	560 OHM 1/5W J	1	EA
R845	CRD20TJ561T	RES , CARBON	560 OHM 1/5W J	1	EA
R848	CRD20TJ273T	RES , CARBON	27K OHM 1/5W J	1	EA
R849	CRD20TJ273T	RES , CARBON	27K OHM 1/5W J	1	EA
R850	CRD20TJ162T	RES , CARBON	1.6K OHM 1/5W J	1	EA
R851	CRD20TJ162T	RES , CARBON	1.6K OHM 1/5W J	1	EA
R852	CRD20TJ152T	RES , CARBON	1.5K OHM 1/5W J	1	EA
R853	CRD20TJ152T	RES , CARBON	1.5K OHM 1/5W J	1	EA
R854	CRD20TJ152T	RES , CARBON	1.5K OHM 1/5W J	1	EA
R855	CRD20TJ152T	RES , CARBON	1.5K OHM 1/5W J	1	EA
R856	CRD20TJ221T	RES , CARBON	220 OHM 1/5W J	1	EA
R857	CRD20TJ221T	RES , CARBON	220 OHM 1/5W J	1	EA
R858	CRD20TJ221T	RES , CARBON	220 OHM 1/5W J	1	EA
R859	CRD20TJ221T	RES , CARBON	220 OHM 1/5W J	1	EA
R860	CRD20TJ271T	RES , CARBON	270 OHM 1/5W J	1	EA
R861	CRD20TJ271T	RES , CARBON	270 OHM 1/5W J	1	EA
R862	CRD20TJ333T	RES , CARBON	33K OHM 1/5W J	1	EA
R863	CRD20TJ333T	RES , CARBON	33K OHM 1/5W J	1	EA
R870	CRD20TJ433T	RES , CARBON	43K OHM 1/5W J	1	EA
R871	CRD20TJ433T	RES , CARBON	43K OHM 1/5W J	1	EA
R872	CRD20TJ471T	RES , CARBON	470 OHM 1/5W J	1	EA
R873	CRD20TJ471T	RES , CARBON	470 OHM 1/5W J	1	EA
R900	CRD20TJ103T	RES , CARBON	10K OHM 1/5W J	1	EA
R901	CRD25TJ393T	RES , CARBON	39K OHM 1/4W J	1	EA
R902	CRD25TJ393T	RES , CARBON	39K OHM 1/4W J	1	EA
R903	CRD25TJ393T	RES , CARBON	39K OHM 1/4W J	1	EA
R906	CRD25TJ393T	RES , CARBON	39K OHM 1/4W J	1	EA
R907	CRD20TJ103T	RES , CARBON	10K OHM 1/5W J	1	EA
R908	CRD20TJ105T	RES , CARBON	1M OHM 1/5W J	1	EA
R910	CRD20TJ105T	RES , CARBON	1M OHM 1/5W J	1	EA
R912	CRD20TJ332T	RES , CARBON	3.3K OHM 1/5W J	1	EA
R913	USE BUSS WIRE	WIRE , COPPER	SN95/PB5 , 0.6	1	EA
R917	CRD25TJ393T	RES , CARBON	39K OHM 1/4W J	1	EA
R918	CRD25TJ393T	RES , CARBON	39K OHM 1/4W J	1	EA
R919	CRD25TJ393T	RES , CARBON	39K OHM 1/4W J	1	EA
R920	CRD25TJ393T	RES , CARBON	39K OHM 1/4W J	1	EA
R921	CRD25FJ180T	RES , CARBON	18 OHM 1/4W J	1	EA
R923	CRD20TJ220T	RES , CARBON	22 OHM 1/5W J	1	EA
R924	CRD20TJ473T	RES , CARBON	47K OHM 1/5W J	1	EA
R925	CRD20TJ473T	RES , CARBON	47K OHM 1/5W J	1	EA
R926	CRD20TJ473T	RES , CARBON	47K OHM 1/5W J	1	EA
R927	CRD20TJ473T	RES , CARBON	47K OHM 1/5W J	1	EA
R928	CRD20TJ222T	RES , CARBON	2.2K OHM 1/5W J	1	EA
R929	CRD20TJ222T	RES , CARBON	2.2K OHM 1/5W J	1	EA
R930	CRD20TJ222T	RES , CARBON	2.2K OHM 1/5W J	1	EA
R931	CRD20TJ222T	RES , CARBON	2.2K OHM 1/5W J	1	EA
R932	CRD20TJ103T	RES , CARBON	10K OHM 1/5W J	1	EA

Ref. Designator	Part Number	Description		Qty	
MAIN PCB/HEATSINK		**(CUP12026)**			
R933	CRD20TJ472T	RES , CARBON	4.7K OHM 1/5W J	1	EA
R934	CRD20TJ823T	RES , CARBON	82K OHM 1/5W J	1	EA
R935	CRD20TJ154T	RES , CARBON	150K OHM 1/5W J	1	EA
R936	CRD20TJ184T	RES , CARBON	180K OHM 1/5W J	1	EA
R939	CRD20TJ472T	RES , CARBON	4.7K OHM 1/5W J	1	EA
R940	CRD20TJ152T	RES , CARBON	1.5K OHM 1/5W J	1	EA
R941	CRD20TJ223T	RES , CARBON	22K OHM 1/5W J	1	EA
R942	CRD20TJ223T	RES , CARBON	22K OHM 1/5W J	1	EA
R943	CRD20TJ223T	RES , CARBON	22K OHM 1/5W J	1	EA
R944	CRD25TJ223T	RES , CARBON	22K OHM 1/4W J	1	EA
R945	CRD20TJ223T	RES , CARBON	22K OHM 1/5W J	1	EA
R946	CRD25TJ223T	RES , CARBON	22K OHM 1/4W J	1	EA
R947	CRD20TJ223T	RES , CARBON	22K OHM 1/5W J	1	EA
R948	CRD25TJ153T	RES , CARBON	15K OHM 1/4W J	1	EA
R952	CRD25TJ223T	RES , CARBON	22K OHM 1/4W J	1	EA
R953	CRD20TJ223T	RES , CARBON	22K OHM 1/5W J	1	EA
R954	CRD20TJ223T	RES , CARBON	22K OHM 1/5W J	1	EA
R955	CRD20TJ203T	RES , CARBON	20K OHM 1/5W J	1	EA
R956	CRD20TJ394T	RES , CARBON	390K OHM 1/5W J	1	EA
R957	CRD20TJ153T	RES , CARBON	15K OHM 1/5W J	1	EA
R958	CRD20TJ563T	RES , CARBON	56K OHM 1/5W J	1	EA
R959	CRD20TJ104T	RES , CARBON	100K OHM 1/5W J	1	EA
R960	CRD20TJ332T	RES , CARBON	3.3K OHM 1/5W J	1	EA
R961	CRD20TJ331T	RES , CARBON	330 OHM 1/5W J	1	EA
R962	CRD20TJ273T	RES , CARBON	27K OHM 1/5W J	1	EA
R963	CRD20TJ105T	RES , CARBON	1M OHM 1/5W J	1	EA
R964	CRD20TJ223T	RES , CARBON	22K OHM 1/5W J	1	EA
R965	CRD20TJ223T	RES , CARBON	22K OHM 1/5W J	1	EA
R966	CRD20TJ472T	RES , CARBON	4.7K OHM 1/5W J	1	EA
R967	CRD20TJ562T	RES , CARBON	5.6K OHM 1/5W J	1	EA
R968	CRD20TJ105T	RES , CARBON	1M OHM 1/5W J	1	EA
R969	CRD20TJ103T	RES , CARBON	10K OHM 1/5W J	1	EA
R986	CRD20TJ102T	RES , CARBON	1K OHM 1/5W J	1	EA
R987	CRD20TJ561T	RES , CARBON	560 OHM 1/5W J	1	EA
R988	CRD20TJ562T	RES , CARBON	5.6K OHM 1/5W J	1	EA
R989	CRD20TJ302T	RES , CARBON	3K OHM 1/5W J	1	EA
R991	CRD20TJ822T	RES , CARBON	8.2K OHM 1/5W J	1	EA
R992	CRD20TJ562T	RES , CARBON	5.6K OHM 1/5W J	1	EA
R998	CRD20TJ103T	RES , CARBON	10K OHM 1/5W J	1	EA
R656	CRF5EKR27HX2K	RES , CEMENT	0.27ohm X 2	1	EA
R657	CRF5EKR27HX2K	RES , CEMENT	0.27ohm X 2	1	EA
R658	CRF5EKR27HX2K	RES , CEMENT	0.27ohm X 2	1	EA
R659	CRF5EKR27HX2K	RES , CEMENT	0.27ohm X 2	1	EA
R660	CRF5EKR27HX2K	RES , CEMENT	0.27ohm X 2	1	EA
R810	CRF5EKR27HX2K	RES , CEMENT	0.27ohm X 2	1	EA
R811	CRF5EKR27HX2K	RES , CEMENT	0.27ohm X 2	1	EA
R905	CRG1ANJ1R0H	RES , METAL OXIDE FILM	1 OHM 1W J	1	EA
R911	CRG1ANJ271H	RES , METAL OXIDE(270/1W)	270 OHM 1W J	1	EA
R922	CRG1ANJ680H	RES , METAL OXIDE FILM	68 OHM 1W J	1	EA
R990	CRG1ANJ100H	RES , METAL OXIDE FILM	10 OHM 1W J	1	EA
R993	CRG1ANJ100H	RES , METAL OXIDE FILM	10 OHM 1W J	1	EA
R994	CRG1ANJ100H	RES , METAL OXIDE FILM	10 OHM 1W J	1	EA
R995	CRG1ANJ100H	RES , METAL OXIDE FILM	10 OHM 1W J	1	EA
R996	CRG1ANJ100H	RES , METAL OXIDE FILM	10 OHM 1W J	1	EA
R997	CRG1ANJ100H	RES , METAL OXIDE FILM	10 OHM 1W J	1	EA
R999	CRG1ANJ100H	RES , METAL OXIDE FILM	10 OHM 1W J	1	EA
Miscellaneous					
ET90	HJT1A025	PLATE , EARTH	MET37-0002	1	EA
ET91	HJT1A025	PLATE , EARTH	MET37-0002	1	EA
F901	KJCFC5S	HOLDER , FUSE	HOLDER	2	EA
F902	KBA2D2500TLET	FUSE(SR-5,2.5A,250V)	SAVE FUSETECH	1	EA
	CMYAVR255	HEAT SINK ASS'Y	ASS'Y	1	EA
	CFNCF12825HSN	FAN , MOTOR	FAN	2	EA

Ref. Designator	Part Number	Description		Qty	
MAIN PCB/HEATSINK		**(CUP12026)**			
	CHD1A012R	SCREW , SPECIAL	SCREW	21	EA
	CHD1A036R	SCREW , SPECIAL	SCREW	6	EA
	CHD3A012R	SCREW , SPECIAL	SCREW	4	EA
	CHG1A412	CUSHION	CUSHION	1	EA
	CMD1A398	BRACKET , PCB	BRACKET	2	EA
	CMD1A417	BRACKET , PCB	BRACKET	2	EA
	CMD1A600	BRACKET , FAN	BRACKET	1	EA
	CMD2A615	BRACKET , FAN	BRACKET	1	EA
	CMY1A307	HEAT SINK	HEAT SINK	1	EA
	CMY2A249	HEAT SINK	HEAT SINK	1	EA
	CTB3+10JR	SCREW	SCREW	3	EA
	CTB3+8JR	SCREW	SCREW	7	EA
	CTW3+8JR	SCREW	SCREW	1	EA
	CTW3+8JR	SCREW	SCREW	2	EA
	CWE8202150AA	WIRE ASS'Y	WIRE	1	EA
BN19	CWB3FE03250UP	WIRE ASS'Y	WIRE	1	EA
BN20	CWB3FC04280UP	WIRE ASS'Y	WIRE	1	EA
BN81	CWB1C902050EN	WIRE ASS'Y	WIRE	1	EA
BN82	CWB1C902050EN	WIRE ASS'Y	WIRE	1	EA
BN83	CWB1C902050EN	WIRE ASS'Y	WIRE	1	EA
BN84	CWB1C902050EN	WIRE ASS'Y	WIRE	1	EA
BN85	CWB1C902050EN	WIRE ASS'Y	WIRE	1	EA
BN86	CWB1C902050EN	WIRE ASS'Y	WIRE	1	EA
BN87	CWB1C902050EN	WIRE ASS'Y	WIRE	1	EA
BN88	CWB2B905080EN	WIRE ASS'Y	WIRE	1	EA
BN90	CWB4F232550PU	WIRE ASS'Y	WIRE	1	EA
BN98	HJP08GA130ZK	WAFER	WAFER	1	EA
BN99	CWB1C902250BM	WIRE ASS'Y	WIRE	1	EA
CN11	CJP17GA117ZY	WAFER	WAFER	1	EA
CN12	CJP21GA115ZY	WAFER , CARD CABLE		1	EA
CN61	CJP02GA01ZY	WAFER , STRAIGHT, 2PIN	WAFER	1	EA
CN62	CJP02GA01ZY	WAFER , STRAIGHT, 2PIN	WAFER	1	EA
CN63	CJP02GA01ZY	WAFER , STRAIGHT, 2PIN	WAFER	1	EA
CN64	CJP02GA01ZY	WAFER , STRAIGHT, 2PIN	WAFER	1	EA
CN65	CJP02GA01ZY	WAFER , STRAIGHT, 2PIN	WAFER	1	EA
CN66	CJP02GA01ZY	WAFER , STRAIGHT, 2PIN	WAFER	1	EA
CN67	CJP02GA01ZY	WAFER , STRAIGHT, 2PIN	WAFER	1	EA
CN89	CJP02GA01ZY	WAFER , STRAIGHT, 2PIN	WAFER	1	EA
CN91	CJP02GA89ZY	WAFER	WAFER	1	EA
CN92	CJP02KA060ZY	WAFER	WAFER	1	EA
CN93	CJP02GA01ZY	WAFER , STRAIGHT, 2PIN	WAFER	1	EA
ET01	CMD1A387	BRACKET , PCB	PCB	1	EA
JK91	CJJ5R006Z	TERMINAL , SPEAKER	TERMINAL	1	EA
JK92	CJJ5Q012Z	TERMINAL , SPEAKER	TERMINAL	1	EA
JK97	CJJ4P041W	JACK IN/OUT	JACK	1	EA
JK98	CJJ4P042W	JACK IN/OUT	JACK	1	EA
JW90	CWE8212120VV	WIRE , RED	WIRE	1	EA
JW91	CWE8212180VV	WIRE ASS'Y	WIRE	1	EA
JW93	CWEE202110VV	WIRE (BLACK)	WIRE	1	EA
L501	CLEY0R5KAK	COIL , SPEAKER	0.5UH K	1	EA
L502	CLEY0R5KAK	COIL , SPEAKER	0.5UH K	1	EA
L503	CLEY0R5KAK	COIL , SPEAKER	0.5UH K	1	EA
L504	CLEY0R5KAK	COIL , SPEAKER	0.5UH K	1	EA
L505	CLEY0R5KAK	COIL , SPEAKER	0.5UH K	1	EA
L506	CLEY0R5KAK	COIL , SPEAKER	0.5UH K	1	EA
L507	CLEY0R5KAK	COIL , SPEAKER	0.5UH K	1	EA
OL91	KJJ7A013Z	OUTLET , AC 1 PIN USA	A202D0031P(1P)	1	EA
RY94	CSL1E002ZE	RELAY , POWER	G5PA-1 (DC 6V)	1	EA
TH91	KRTP42T7D330B	THERMAL SENSOR , POSISTOR	P42T7D330BW20	1	EA
T902	CLT5I009ZU	TRANS , SUB C515	TRANS	1	EA
	CHD3A012R	SCREW , SPECIAL	SCREW	3	EA

Ref. Designator	Part Number	Description		Qty	
PCB , POWER TRANS/DOWNLOAD/DIG IN/OUT CUP12101					
				1	EA
Capacitors					
C104	CCBS1E103ZFT	CAP , CERAMIC(10000PF/25V)	CH TP025 F103Z-A-B J	1	EA
C105	CCBS1E103ZFT	CAP , CERAMIC(10000PF/25V)	CH TP025 F103Z-A-B J	1	EA
C106	CCFT1H104ZF	CAP , SEMICONDUCTOR	0.1UF 50V Z	1	EA
C107	CCBS1E103ZFT	CAP , CERAMIC(10000PF/25V)	CH TP025 F103Z-A-B J	1	EA
C108	CCBS1E103ZFT	CAP , CERAMIC(10000PF/25V)	CH TP025 F103Z-A-B J	1	EA
C109	CCFT1H104ZF	CAP , SEMICONDUCTOR	0.1UF 50V Z	1	EA
C117	CCEA1HH4R7T	CAP , ELECT	4.7UF 50V	1	EA
C118	CCBS1E103ZFT	CAP , CERAMIC(10000PF/25V)	CH TP025 F103Z-A-B J	1	EA
C119	CCEA1JH470TS	CAP , ELECT	63V/47UF/105'C	1	EA
C120	CCEA1JH470TS	CAP , ELECT	63V/47UF/105'C	1	EA
C121	CCBS1E103ZFT	CAP , CERAMIC(10000PF/25V)	CH TP025 F103Z-A-B J	1	EA
C126	CCFT1H473ZF	CAP , CERAMIC	0.047UF 50V Z	1	EA
C127	CCFT1H473ZF	CAP , CERAMIC	0.047UF 50V Z	1	EA
C131	CCEA1HH3R3T	CAP , ELECT	3.3UF 50V	1	EA
C750	CCEA1CH101T	CAP , ELECT	100UF 16V	1	EA
C751	CCEA1CH101T	CAP , ELECT	100UF 16V	1	EA
C851	CCEA1HH100T	CAP , ELECT	10UF 50V	1	EA
C852	CCEA1HH100T	CAP , ELECT	10UF 50V	1	EA
C853	CCEA1HH100T	CAP , ELECT	10UF 50V	1	EA
C854	CCEA1HH100T	CAP , ELECT	10UF 50V	1	EA
C855	CCEA1HH100T	CAP , ELECT	10UF 50V	1	EA
C856	CCEA1HH100T	CAP , ELECT	10UF 50V	1	EA
C857	CCEA1HH100T	CAP , ELECT	10UF 50V	1	EA
C911	CCEA1HKS2R2T	CAP , ELECT	2.2UF 50V SMALL SIZE	1	EA
C912	CCEA0JH102T	CAP , ELECT	1000UF 6.3V	1	EA
C919	CCKT1H102KB	CAP , CERAMIC	1000PF 50V K	1	EA
C920	CCEA1HH470T	CAP , ELECT	47UF 50V	1	EA
C921	HCQI1H104JZT	CAP , MYLAR	0.1UF 50V J	1	EA
C922	HCQI1H104JZT	CAP , MYLAR	0.1UF 50V J	1	EA
C923	HCQI1H104JZT	CAP , MYLAR	0.1UF 50V J	1	EA
C924	HCQI1H104JZT	CAP , MYLAR	0.1UF 50V J	1	EA
C925	HCQI1H103JZT	CAP , MYLAR	0.01UF 50V J	1	EA
C926	HCQI1H103JZT	CAP , MYLAR	0.01UF 50V J	1	EA
C927	HCQI1H103JZT	CAP , MYLAR	0.01UF 50V J	1	EA
C928	HCQI1H103JZT	CAP , MYLAR	0.01UF 50V J	1	EA
C931	HCQI1H473JZT	CAP , MYLAR	0.047UF 50V J	1	EA
C932	HCQI1H473JZT	CAP , MYLAR	0.047UF 50V J	1	EA
C933	HCQI1H473JZT	CAP , MYLAR	0.047UF 50V J	1	EA
C934	HCQI1H473JZT	CAP , MYLAR	0.047UF 50V J	1	EA
C935	CCBS1H223ZFT	CAP , CERAMIC	0.022UF 50V	1	EA
C936	CCBS1H223ZFT	CAP , CERAMIC	0.022UF 50V	1	EA
C937	CCBS1H223ZFT	CAP , CERAMIC	0.022UF 50V	1	EA
C938	CCEA1CH101T	CAP , ELECT	100UF 16V	1	EA
C939	CCEA1EH101T	CAP , ELECT	100UF 25V	1	EA
C940	CCEA1EH101T	CAP , ELECT	100UF 25V	1	EA
C953	CCBS1H104ZFT	CAP , CERAMIC	0.1UF 50V Z	1	EA
C954	CCBS1H104ZFT	CAP , CERAMIC	0.1UF 50V Z	1	EA
C957	CCBS1H104ZFT	CAP , CERAMIC	0.1UF 50V Z	1	EA
C971	CCFT1H104ZF	CAP , SEMICONDUCTOR	0.1UF 50V Z	1	EA
C122	CCEA1JH101E	CAP , ELECT	100UF 63V	1	EA
C129	CCEA1EH822E	CAP , ELECT(KR3, 8200UF/25V, 18X30)	8200UF 25V	1	EA
C130	CCEA1EH102E	CAP , ELECT	2200UF 35V	1	EA
C929	CCEA1VH222EZ	CAP , ELECT (2200UF/35V, 12.5X31)	2200UF 35V	1	EA
C930	CCEA1VH222EZ	CAP , ELECT (2200UF/35V, 12.5X31)	6800UF 24V	1	EA
C941	CCEA1EH682E	CAP , ELECT(KR3, 25V/6800, 18X35.5)	1000UF 50V	1	EA
Semiconductors					
D101	CVDZJ15BT	DIODE , ZENER	ZJ15B 1/2W	1	EA
D102	HVDMTZJ27BT	DIODE , ZENER	MTZJ27B 1/2W	1	EA
D104	CVD1N4003ST	DIODE , RECT	1N4003	1	EA
D105	CVD1N4003ST	DIODE , RECT	1N4003	1	EA
D108	CVD1N4003ST	DIODE , RECT	1N4003	1	EA

Ref. Designator	Part Number	Description		Qty	
PCB , POWER TRANS/DOWNLOAD/DIG IN/OUT CUP12101					
D109	CVDZJ8.2BT	DIODE , ZENER	ZJ8.2B 1/2W	1	EA
D111	CVDZJ8.2BT	DIODE , ZENER	ZJ8.2B 1/2W	1	EA
D114	CVD1N4003ST	DIODE , RECT	1N4003	1	EA
D115	CVD1N4003ST	DIODE , RECT	1N4003	1	EA
D116	CVD1N4003ST	DIODE , RECT	1N4003	1	EA
D117	CVD1N4003ST	DIODE , RECT	1N4003	1	EA
D120	CVD1N4003ST	DIODE , RECT	1N4003	1	EA
D121	CVD1N4003ST	DIODE , RECT	1N4003	1	EA
D124	CVD1N4003ST	DIODE , RECT	1N4003	1	EA
D125	CVD1N4003ST	DIODE , RECT	1N4003	1	EA
D201	CVDZJ3.3BT	DIODE , ZENER	ZJ3.3B 1/2W	1	EA
D801	CVD1SS133MT	DIODE	1SS133	1	EA
D802	CVD1SS133MT	DIODE	1SS133	1	EA
D921	CVD1SS133MT	DIODE	1SS133	1	EA
Q104	HVTKSC2316YT	TRANSISTOR NPN	KSC2316Y	1	EA
Q911	HVTKTA1267YT	TRANSISTOR PNP	KTA1267Y	1	EA
Q912	HVTKTC3198YT	TRANSISTOR NPN	KTC3198Y	1	EA
Q913	HVTKTC3198YT	TRANSISTOR NPN	KTC3198Y	1	EA
Q995	HVTKRA107MT	TRANSISTOR PNP	KRA107M	1	EA
Q997	HVTKRC107MT	TRANSISTOR NPN	KRC107M	1	EA
D701	HVDKBU804F	DIODE , BRIDGE	DIODE	1	EA
D991	CVDKBU804FMA	BRIDGE DIODE ASS'Y	ASS'Y	1	EA
	HVDKBU804F	DIODE , BRIDGE	DIODE	1	EA
D992	CVDKBU804FMA	BRIDGE DIODE ASS'Y	ASS'Y	1	EA
	HVDKBU804F	DIODE , BRIDGE	DIODE	1	EA
IC81	CVIST232CDR	IC , RS232C(SO-16TYPE)	ST(ST232CDR)	1	EA
IC89	HVIKIA278R05PI	REGULATOR (5V OUTPUT LOW DROP)	KEC(KIA278R05PI)	1	EA
IC90	CVIKIA278R15PI	I.C , REGULATOR(15V OUTPUT LOW DROP)	KEC(KIA278R15PI)	1	EA
IC91	CVIKIA7915PI	I.C , REGULATOR(15V, TO-220AB)	KEC(KIA7915PI)	1	EA
IC97	BVIKP1010B	IC, PHOTO COUPLER	COSMO(KP1010B)	1	EA
IC98	BVIKP1010B	IC, PHOTO COUPLER	COSMO(KP1010B)	1	EA
IC99	HVI74LCX32TTR	I.C , OR-GATE	ST(74LCX32TTR)	1	EA
Q851	HVTKTD600KGR	TRANSISTOR , BIAS NPN	KTD600KGR	1	EA
Q852	HVTKTD600KGR	TRANSISTOR , BIAS NPN	KTD600KGR	1	EA
Q853	HVTKTD600KGR	TRANSISTOR , BIAS NPN	KTD600KGR	1	EA
Q854	HVTKTD600KGR	TRANSISTOR , BIAS NPN	KTD600KGR	1	EA
Q855	HVTKTD600KGR	TRANSISTOR , BIAS NPN	KTD600KGR	1	EA
Q856	HVTKTD600KGR	TRANSISTOR , BIAS NPN	KTD600KGR	1	EA
Q857	HVTKTD600KGR	TRANSISTOR , BIAS NPN	KTD600KGR	1	EA
Resistors					
R101	CRD25FJ3R3T	RES , CARBON	3.3 OHM 1/4W J	1	EA
R108	CRD20TJ8R2T	RES , CARBON	8.2 OHM 1/5W J	1	EA
R109	CRD20TJ100T	RES , CARBON	10 OHM 1/5W J	1	EA
R110	CRD20TJ8R2T	RES , CARBON	8.2 OHM 1/5W J	1	EA
R112	CRD20TJ122T	RES , CARBON	1.2K OHM 1/5W J	1	EA
R113	CRD20TJ473T	RES , CARBON	47K OHM 1/5W J	1	EA
R120	CRD20TJ103T	RES , CARBON	10K OHM 1/5W J	1	EA
R121	CRD20TJ104T	RES , CARBON	100K OHM 1/5W J	1	EA
R122	CRD20TJ104T	RES , CARBON	100K OHM 1/5W J	1	EA
R750	CRD20TJ103T	RES , CARBON	10K OHM 1/5W J	1	EA
R751	CRD20TJ103T	RES , CARBON	10K OHM 1/5W J	1	EA
R874	CRD20TJ331T	RES , CARBON	330 OHM 1/5W J	1	EA
R875	CRD20TJ331T	RES , CARBON	330 OHM 1/5W J	1	EA
R876	CRD20TJ331T	RES , CARBON	330 OHM 1/5W J	1	EA
R877	CRD20TJ331T	RES , CARBON	330 OHM 1/5W J	1	EA
R878	CRD20TJ331T	RES , CARBON	330 OHM 1/5W J	1	EA
R879	CRD20TJ331T	RES , CARBON	330 OHM 1/5W J	1	EA
R880	CRD20TJ331T	RES , CARBON	330 OHM 1/5W J	1	EA
R882	CRD20TJ122T	RES , CARBON	1.2K OHM 1/5W J	1	EA
R883	CRD20TJ122T	RES , CARBON	1.2K OHM 1/5W J	1	EA
R884	CRD20TJ122T	RES , CARBON	1.2K OHM 1/5W J	1	EA
R885	CRD20TJ122T	RES , CARBON	1.2K OHM 1/5W J	1	EA
R886	CRD20TJ122T	RES , CARBON	1.2K OHM 1/5W J	1	EA

Ref. Designator	Part Number	Description		Qty	
PCB , POWER TRANS/DOWNLOAD/DIG IN/OUT CUP12101					
R887	CRD20TJ122T	RES , CARBON	1.2K OHM 1/5W J	1	EA
R888	CRD20TJ122T	RES , CARBON	1.2K OHM 1/5W J	1	EA
R891	CRD20TJ391T	RES , CARBON	390 OHM 1/5W J	1	EA
R892	CRD20TJ391T	RES , CARBON	390 OHM 1/5W J	1	EA
R893	CRD20TJ391T	RES , CARBON	390 OHM 1/5W J	1	EA
R894	CRD20TJ391T	RES , CARBON	390 OHM 1/5W J	1	EA
R895	CRD20TJ391T	RES , CARBON	390 OHM 1/5W J	1	EA
R896	CRD20TJ391T	RES , CARBON	390 OHM 1/5W J	1	EA
R897	CRD20TJ391T	RES , CARBON	390 OHM 1/5W J	1	EA
R901	CRD20TJ272T	RES , CARBON	2.7K OHM 1/5W J	1	EA
R912	CRD20TJ153T	RES , CARBON	15K OHM 1/5W J	1	EA
R913	CRD20TJ153T	RES , CARBON	15K OHM 1/5W J	1	EA
R917	CRD20TJ153T	RES , CARBON	15K OHM 1/5W J	1	EA
R918	CRD20TJ153T	RES , CARBON	15K OHM 1/5W J	1	EA
R919	CRD20TJ153T	RES , CARBON	15K OHM 1/5W J	1	EA
R920	CRD20TJ153T	RES , CARBON	15K OHM 1/5W J	1	EA
R921	CRD20TJ153T	RES , CARBON	15K OHM 1/5W J	1	EA
R922	CRD20TJ153T	RES , CARBON	15K OHM 1/5W J	1	EA
R923	CRD25TJ153T	RES , CARBON	15K OHM 1/4W J	1	EA
R924	CRD20TJ153T	RES , CARBON	15K OHM 1/5W J	1	EA
R925	CRD20TJ103T	RES , CARBON	10K OHM 1/5W J	1	EA
R926	CRD25TJ103T	RES , CARBON	10K OHM 1/4W J	1	EA
R927	CRD20TJ104T	RES , CARBON	100K OHM 1/5W J	1	EA
R928	CRD20TJ333T	RES , CARBON	33K OHM 1/5W J	1	EA
R941	CRD20TJ104T	RES , CARBON	100K OHM 1/5W J	1	EA
R942	CRD20TJ104T	RES , CARBON	100K OHM 1/5W J	1	EA
R956	CRD20TJ1R0T	RES , CARBON	1 OHM 1/5W J	1	EA
R957	CRD20TJ101T	RES , CARBON	100 OHM 1/5W J	1	EA
R970	CRD20TJ103T	RES , CARBON	10K OHM 1/5W J	1	EA
R971	CRD20TJ103T	RES , CARBON	10K OHM 1/5W J	1	EA
R972	CRD20TJ473T	RES , CARBON	47K OHM 1/5W J	1	EA
R973	CRD20TJ473T	RES , CARBON	47K OHM 1/5W J	1	EA
R974	CRD20TJ271T	RES , CARBON	270 OHM 1/5W J	1	EA
R975	CRD20TJ271T	RES , CARBON	270 OHM 1/5W J	1	EA
R976	CRD20TJ470T	RES , CARBON	47 OHM 1/5W J	1	EA
R977	CRD20TJ103T	RES , CARBON	10K OHM 1/5W J	1	EA
VR81	CVN1RA221B02T	RES , SEMI FIXED (220, B CURVE)	KVSF637AVC	1	EA
VR82	CVN1RA221B02T	RES , SEMI FIXED (220, B CURVE)	KVSF637AVC	1	EA
VR83	CVN1RA221B02T	RES , SEMI FIXED (220, B CURVE)	KVSF637AVC	1	EA
VR84	CVN1RA221B02T	RES , SEMI FIXED (220, B CURVE)	KVSF637AVC	1	EA
VR85	CVN1RA221B02T	RES , SEMI FIXED (220, B CURVE)	KVSF637AVC	1	EA
VR86	CVN1RA221B02T	RES , SEMI FIXED (220, B CURVE)	KVSF637AVC	1	EA
VR87	CVN1RA221B02T	RES , SEMI FIXED (220, B CURVE)	KVSF637AVC	1	EA
R104	KRQ1AJR47H	RES , FUSE	0.47 OHM 1W J	1	EA
R105	KRQ1AJR47H	RES , FUSE	0.47 OHM 1W J	1	EA
R106	CRQ1AJR33H	RES , FUSE	0.33 OHM 1W J	1	EA
R107	CRQ1AJR33H	RES , FUSE	0.33 OHM 1W J	1	EA
Miscellaneous					
F110	KBA2D2500TLET	FUSE(SR-5,2.5A,250V)	SAVE FUSETECH	1	EA
F111	KBA2D2500TLET	FUSE(SR-5,2.5A,250V)	SAVE FUSETECH	1	EA
	CMD1A618	BRACKET , RESET	BRACKET	1	EA
BN17	CJP06GB143ZB	FEMALE HEADER(6P, 2.54mm)	HEADER	1	EA
BN20	CWB1C905180BM	WIRE ASS'Y	WIRE	1	EA
BN21	CWB1C905120EN	WIRE ASS'Y	WIRE	1	EA
BN79	CWB1C907120EN	WIRE ASS'Y(7P, 2MM, 120MM)	WIRE	1	EA
BN80	CWB2B903180EN	WIRE ASS'Y	WIRE	1	EA
BN96	CWB1C915180EN	WIRE ASS'Y(15P, 2MM, 180MM)	WIRE	1	EA
BN97	CWB1C907120EN	WIRE ASS'Y(7P, 2MM, 120MM)	WIRE	1	EA
CN13	CJP05GA01ZY	WAFER(YMW025-05R)	WAFER	1	EA
CN19	CJP03GA90ZY	WAFER	WAFER	1	EA
CN20	CJP04GA90ZM	WAFER	WAFER	1	EA
CN31	CJP02GA19ZY	WAFER , 2PIN	WAFER	1	EA
CN32	CJP02GA19ZY	WAFER , 2PIN	WAFER	1	EA

Ref. Designator	Part Number	Description		Qty	
PCB , POWER TRANS/DOWNLOAD/DIG IN/OUT CUP12101					
CN33	CJP02GA19ZY	WAFER , 2PIN	WAFER	1	EA
CN34	CJP02GA19ZY	WAFER , 2PIN	WAFER	1	EA
CN35	CJP02GA19ZY	WAFER , 2PIN	WAFER	1	EA
CN36	CJP02GA19ZY	WAFER , 2PIN	WAFER	1	EA
CN37	CJP02GA19ZY	WAFER , 2PIN	WAFER	1	EA
CN47	CJP07GA117ZY	WAFER	WAFER	1	EA
CN79	CJP07GA19ZY	WAFER , STRAIGHT(7PIN)	WAFER	1	EA
CN81	CJP07GA01ZY	WAFER , STRAIGHT(7PIN)	WAFER	1	EA
CN88	CJP05GA19ZY	WAFER , STRAIGHT	WAFER	1	EA
CN96	CJP15GA19ZY	WAFER	WAFER	1	EA
CN98	HJP08GB131ZK	WAFER	WAFER	1	EA
	CMY1A219	HEAT SINK (BRIDGE DIODE)	HEAT SINK	1	EA
	CTB3+12JR	SCREW	SCREW	1	EA
	CMY1A219	HEAT SINK (BRIDGE DIODE)	HEAT SINK	1	EA
	CTB3+12JR	SCREW	SCREW	1	EA
ET04	CMD1A569	BRACKET , PCB	BRACKET	1	EA
ET05	CMD1A569	BRACKET , PCB	BRACKET	1	EA
JK75	HJSTORX177L	MODULE , OPTICAL(RX)	TORX177L	1	EA
JK76	HJSTORX177L	MODULE , OPTICAL(RX)	TORX177L	1	EA
JK94	CJJ2D008Z	JACK , STEREO	JACK	1	EA
JK95	CJJ2D008Z	JACK , STEREO	JACK	1	EA
JK96	CJJ2D008Z	JACK , STEREO	JACK	1	EA
JK97	CJJ9W001Z	JACK , 9P D-SUB FEMALE(RS-232C, SEMCO)	JACK	1	EA
SW95	CST1A010Z	SW , TACT	TACT SWITCH	1	EA
SW96	HSH2B018Z	SW , PUSH	SPUJ19XSM011	1	EA
SW97	HSH2B018Z	SW , PUSH	SPUJ19XSM011	1	EA
PCB , INPUT		**CUP12028**			
Capacitors					
C201	CCUS1H221JA	CAP , CHIP	220PF 50V J	1	EA
C202	CCUS1H221JA	CAP , CHIP	220PF 50V J	1	EA
C203	CCUS1H221JA	CAP , CHIP	220PF 50V J	1	EA
C204	CCUS1H221JA	CAP , CHIP	220PF 50V J	1	EA
C205	CCUS1H221JA	CAP , CHIP	220PF 50V J	1	EA
C206	CCUS1H221JA	CAP , CHIP	220PF 50V J	1	EA
C209	CCUS1H221JA	CAP , CHIP	220PF 50V J	1	EA
C210	CCUS1H221JA	CAP , CHIP	220PF 50V J	1	EA
C211	CCUS1H221JA	CAP , CHIP	220PF 50V J	1	EA
C212	CCUS1H221JA	CAP , CHIP	220PF 50V J	1	EA
C213	CCUS1H221JA	CAP , CHIP	220PF 50V J	1	EA
C214	CCUS1H221JA	CAP , CHIP	220PF 50V J	1	EA
C215	CCUS1H221JA	CAP , CHIP	220PF 50V J	1	EA
C216	CCUS1H221JA	CAP , CHIP	220PF 50V J	1	EA
C219	CCUS1H221JA	CAP , CHIP	220PF 50V J	1	EA
C220	CCUS1H221JA	CAP , CHIP	220PF 50V J	1	EA
C221	CCUS1H221JA	CAP , CHIP	220PF 50V J	1	EA
C222	CCUS1H221JA	CAP , CHIP	220PF 50V J	1	EA
C223	CCUS1H221JA	CAP , CHIP	220PF 50V J	1	EA
C224	CCUS1H221JA	CAP , CHIP	220PF 50V J	1	EA
C225	CCUS1H221JA	CAP , CHIP	220PF 50V J	1	EA
C226	CCUS1H221JA	CAP , CHIP	220PF 50V J	1	EA
C260	CCUS1H104KC	CAP , CHIP	0.1UF 50V K	1	EA
C269	CCUS1A105KC	CAP , CHIP	1UF 10V K	1	EA
C274	CCUS1A105KC	CAP , CHIP	1UF 10V K	1	EA
C277	CCUS1H104KC	CAP , CHIP	0.1UF 50V K	1	EA
C279	CCUS1H104KC	CAP , CHIP	0.1UF 50V K	1	EA
C280	CCUS1H104KC	CAP , CHIP	0.1UF 50V K	1	EA
C289	CCUS1H104KC	CAP , CHIP	0.1UF 50V K	1	EA
C290	CCUS1H104KC	CAP , CHIP	0.1UF 50V K	1	EA
C291	CCUS1H104KC	CAP , CHIP	0.1UF 50V K	1	EA
C293	CCUS1H104KC	CAP , CHIP	0.1UF 50V K	1	EA
C295	CCUS1H272KC	CAP , CHIP	2700PF 50V K	1	EA

Ref. Designator	Part Number	Description		Qty	
PCB , INPUT		**CUP12028**			
C296	CCUS1H272KC	CAP , CHIP	2700PF 50V K	1	EA
C299	CCUS1H104KC	CAP , CHIP	0.1UF 50V K	1	EA
C301	CCUS1H152KC	CAP , CHIP	1500PF 50V K	1	EA
C302	CCUS1H152KC	CAP , CHIP	1500PF 50V K	1	EA
C303	CCUS1H152KC	CAP , CHIP	1500PF 50V K	1	EA
C304	CCUS1H152KC	CAP , CHIP	1500PF 50V K	1	EA
C305	CCUS1H152KC	CAP , CHIP	1500PF 50V K	1	EA
C306	CCUS1H152KC	CAP , CHIP	1500PF 50V K	1	EA
C307	CCUS1H152KC	CAP , CHIP	1500PF 50V K	1	EA
C308	CCUS1H152KC	CAP , CHIP	1500PF 50V K	1	EA
C309	CCUS1H102KC	CAP , CHIP	1000PF 50V K	1	EA
C310	CCUS1H102KC	CAP , CHIP	1000PF 50V K	1	EA
C311	CCUS1H102KC	CAP , CHIP	1000PF 50V K	1	EA
C312	CCUS1H102KC	CAP , CHIP	1000PF 50V K	1	EA
C313	CCUS1H102KC	CAP , CHIP	1000PF 50V K	1	EA
C314	CCUS1H102KC	CAP , CHIP	1000PF 50V K	1	EA
C315	CCUS1H102KC	CAP , CHIP	1000PF 50V K	1	EA
C316	CCUS1H102KC	CAP , CHIP	1000PF 50V K	1	EA
C317	CCUS1H223KC	CAP , CHIP	0.022UF 50V K	1	EA
C318	CCUS1H223KC	CAP , CHIP	0.022UF 50V K	1	EA
C319	CCUS1H223KC	CAP , CHIP	0.022UF 50V K	1	EA
C320	CCUS1H223KC	CAP , CHIP	0.022UF 50V K	1	EA
C321	CCUS1H271JA	CAP , CHIP	270PF 50V J	1	EA
C322	CCUS1H271JA	CAP , CHIP	270PF 50V J	1	EA
C323	CCUS1H271JA	CAP , CHIP	270PF 50V J	1	EA
C324	CCUS1H271JA	CAP , CHIP	270PF 50V J	1	EA
C325	CCUS1H561JA	CAP , CHIP	560PF 50V J	1	EA
C326	CCUS1H561JA	CAP , CHIP	560PF 50V J	1	EA
C327	CCUS1H561JA	CAP , CHIP	560PF 50V J	1	EA
C328	CCUS1H561JA	CAP , CHIP	560PF 50V J	1	EA
C329	CCUS1H561JA	CAP , CHIP	560PF 50V J	1	EA
C330	CCUS1H561JA	CAP , CHIP	560PF 50V J	1	EA
C331	CCUS1H561JA	CAP , CHIP	560PF 50V J	1	EA
C332	CCUS1H561JA	CAP , CHIP	560PF 50V J	1	EA
C333	CCUS1H561JA	CAP , CHIP	560PF 50V J	1	EA
C334	CCUS1H561JA	CAP , CHIP	560PF 50V J	1	EA
C335	CCUS1H561JA	CAP , CHIP	560PF 50V J	1	EA
C336	CCUS1H561JA	CAP , CHIP	560PF 50V J	1	EA
C337	CCUS1H223KC	CAP , CHIP	0.022UF 50V K	1	EA
C338	CCUS1H223KC	CAP , CHIP	0.022UF 50V K	1	EA
C339	CCUS1H223KC	CAP , CHIP	0.022UF 50V K	1	EA
C340	CCUS1H223KC	CAP , CHIP	0.022UF 50V K	1	EA
C350	CCUS1H102KC	CAP , CHIP	1000PF 50V K	1	EA
C351	CCUS1H102KC	CAP , CHIP	1000PF 50V K	1	EA
C352	CCUS1H102KC	CAP , CHIP	1000PF 50V K	1	EA
C353	CCUS1H102KC	CAP , CHIP	1000PF 50V K	1	EA
C354	CCUS1H102KC	CAP , CHIP	1000PF 50V K	1	EA
C355	CCUS1H102KC	CAP , CHIP	1000PF 50V K	1	EA
C356	CCUS1H102KC	CAP , CHIP	1000PF 50V K	1	EA
C357	CCUS1H102KC	CAP , CHIP	1000PF 50V K	1	EA
C369	CCUS1H223KC	CAP , CHIP	0.022UF 50V K	1	EA
C370	CCUS1H223KC	CAP , CHIP	0.022UF 50V K	1	EA
C381	CCUS1H223KC	CAP , CHIP	0.022UF 50V K	1	EA
C382	CCUS1H223KC	CAP , CHIP	0.022UF 50V K	1	EA
C383	CCUS1H223KC	CAP , CHIP	0.022UF 50V K	1	EA
C384	CCUS1H223KC	CAP , CHIP	0.022UF 50V K	1	EA
C385	CCUS1H223KC	CAP , CHIP	0.022UF 50V K	1	EA
C386	CCUS1H223KC	CAP , CHIP	0.022UF 50V K	1	EA
C387	CCUS1H223KC	CAP , CHIP	0.022UF 50V K	1	EA
C388	CCUS1H223KC	CAP , CHIP	0.022UF 50V K	1	EA
C391	CCUS1H151JA	CAP , CHIP	150PF 50V J	1	EA
C392	CCUS1H151JA	CAP , CHIP	150PF 50V J	1	EA
C393	CCUS1H151JA	CAP , CHIP	150PF 50V J	1	EA
C394	CCUS1H102KC	CAP , CHIP	1000PF 50V K	1	EA
C395	CCUS1H151JA	CAP , CHIP	150PF 50V J	1	EA

Ref. Designator	Part Number	Description		Qty	
PCB , INPUT		**CUP12028**			
C396	CCUS1H151JA	CAP , CHIP	150PF 50V J	1	EA
C397	CCUS1H151JA	CAP , CHIP	150PF 50V J	1	EA
C398	CCUS1H151JA	CAP , CHIP	150PF 50V J	1	EA
C532	CCUS1H182KC	CAP , CHIP	1800PF 50V K	1	EA
C534	CCUS1H182KC	CAP , CHIP	1800PF 50V K	1	EA
C535	CCUS1H182KC	CAP , CHIP	1800PF 50V K	1	EA
C536	CCUS1H182KC	CAP , CHIP	1800PF 50V K	1	EA
C537	CCUS1H182KC	CAP , CHIP	1800PF 50V K	1	EA
C538	CCUS1H182KC	CAP , CHIP	1800PF 50V K	1	EA
C539	CCUS1H182KC	CAP , CHIP	1800PF 50V K	1	EA
C540	CCUS1H182KC	CAP , CHIP	1800PF 50V K	1	EA
C601	CCUS1H104KC	CAP , CHIP	0.1UF 50V K	1	EA
C603	CCUS1H104KC	CAP , CHIP	0.1UF 50V K	1	EA
C605	CCUS1H104KC	CAP , CHIP	0.1UF 50V K	1	EA
C607	CCUS1H104KC	CAP , CHIP	0.1UF 50V K	1	EA
C609	CCUS1H104KC	CAP , CHIP	0.1UF 50V K	1	EA
C611	CCUS1H104KC	CAP , CHIP	0.1UF 50V K	1	EA
C613	CCUS1H104KC	CAP , CHIP	0.1UF 50V K	1	EA
C615	CCUS1H104KC	CAP , CHIP	0.1UF 50V K	1	EA
C617	CCUS1H104KC	CAP , CHIP	0.1UF 50V K	1	EA
C619	CCUS1H104KC	CAP , CHIP	0.1UF 50V K	1	EA
C621	CCUS1H104KC	CAP , CHIP	0.1UF 50V K	1	EA
C623	CCUS1H104KC	CAP , CHIP	0.1UF 50V K	1	EA
C625	CCUS1H104KC	CAP , CHIP	0.1UF 50V K	1	EA
C627	CCUS1H104KC	CAP , CHIP	0.1UF 50V K	1	EA
C629	CCUS1H104KC	CAP , CHIP	0.1UF 50V K	1	EA
C631	CCUS1H104KC	CAP , CHIP	0.1UF 50V K	1	EA
C701	CCUS1H150JA	CAP , CHIP	15PF 50V J	1	EA
C702	CCUS1H150JA	CAP , CHIP	15PF 50V J	1	EA
C704	CCUS1H104KC	CAP , CHIP	0.1UF 50V K	1	EA
C705	CCUS1H104KC	CAP , CHIP	0.1UF 50V K	1	EA
C707	CCUS1H102KC	CAP , CHIP	1000PF 50V K	1	EA
C708	CCUS1H104KC	CAP , CHIP	0.1UF 50V K	1	EA
C716	CCUS1H151JA	CAP , CHIP	150PF 50V J	1	EA
C718	CCUS1H104KC	CAP , CHIP	0.1UF 50V K	1	EA
C719	CCUS1H104KC	CAP , CHIP	0.1UF 50V K	1	EA
C722	CCUS1H104KC	CAP , CHIP	0.1UF 50V K	1	EA
C723	CCUS1H473KC	CAP , CHIP	0.047UF 50V K	1	EA
C725	CCUS1H104KC	CAP , CHIP	0.1UF 50V K	1	EA
C727	CCUS1H104KC	CAP , CHIP	0.1UF 50V K	1	EA
C729	CCUS1H104KC	CAP , CHIP	0.1UF 50V K	1	EA
C731	CCUS1H104KC	CAP , CHIP	0.1UF 50V K	1	EA
C733	CCUS1H104KC	CAP , CHIP	0.1UF 50V K	1	EA
C734	CCUS1H104KC	CAP , CHIP	0.1UF 50V K	1	EA
C738	CCUS1A105KC	CAP , CHIP	1UF 10V K	1	EA
C739	CCUS1H103KC	CAP , CHIP	0.01UF 50V K	1	EA
C741	CCUS1H104KC	CAP , CHIP	0.1UF 50V K	1	EA
C742	CCUS1H180JA	CAP , CHIP	18PF 50V J	1	EA
C743	CCUS1H104KC	CAP , CHIP	0.1UF 50V K	1	EA
C744	CCUS1H180JA	CAP , CHIP	18PF 50V J	1	EA
C745	CCUS1H104KC	CAP , CHIP	0.1UF 50V K	1	EA
C746	CCUS1H104KC	CAP , CHIP	0.1UF 50V K	1	EA
C747	CCUS1H104KC	CAP , CHIP	0.1UF 50V K	1	EA
C748	CCUS1H104KC	CAP , CHIP	0.1UF 50V K	1	EA
C751	CCUS1H104KC	CAP , CHIP	0.1UF 50V K	1	EA
C754	CCUS1H104KC	CAP , CHIP	0.1UF 50V K	1	EA
C756	CCUS1H104KC	CAP , CHIP	0.1UF 50V K	1	EA
C758	CCUS1H104KC	CAP , CHIP	0.1UF 50V K	1	EA
C759	CCUS1H104KC	CAP , CHIP	0.1UF 50V K	1	EA
C760	CCUS1H104KC	CAP , CHIP	0.1UF 50V K	1	EA
C761	CCUS1H104KC	CAP , CHIP	0.1UF 50V K	1	EA
C762	CCUS1H104KC	CAP , CHIP	0.1UF 50V K	1	EA
C763	CCUS1H104KC	CAP , CHIP	0.1UF 50V K	1	EA
C765	CCUS1H104KC	CAP , CHIP	0.1UF 50V K	1	EA
C768	CCUS1H104KC	CAP , CHIP	0.1UF 50V K	1	EA

Ref. Designator	Part Number	Description		Qty	
PCB , INPUT		**CUP12028**			
C769	CCUS1H104KC	CAP , CHIP	0.1UF 50V K	1	EA
C770	CCUS1H104KC	CAP , CHIP	0.1UF 50V K	1	EA
C771	CCUS1H104KC	CAP , CHIP	0.1UF 50V K	1	EA
C772	CCUS1H104KC	CAP , CHIP	0.1UF 50V K	1	EA
C773	CCUS1H104KC	CAP , CHIP	0.1UF 50V K	1	EA
C775	CCUS1H104KC	CAP , CHIP	0.1UF 50V K	1	EA
C780	CCUS1H102KC	CAP , CHIP	1000PF 50V K	1	EA
C781	CCUS1H223KC	CAP , CHIP	0.022UF 50V K	1	EA
C782	CCUS1H103KC	CAP , CHIP	0.01UF 50V K	1	EA
C783	CCUS1H103KC	CAP , CHIP	0.01UF 50V K	1	EA
C784	CCUS1H103KC	CAP , CHIP	0.01UF 50V K	1	EA
C787	CCUS1H103KC	CAP , CHIP	0.01UF 50V K	1	EA
C789	CCUS1H103KC	CAP , CHIP	0.01UF 50V K	1	EA
C790	CCUS1H103KC	CAP , CHIP	0.01UF 50V K	1	EA
C791	CCUS1H104KC	CAP , CHIP	0.1UF 50V K	1	EA
C793	CCUS1H101JA	CAP , CHIP	100PF 50V J	1	EA
C794	CCUS1H181JA	CAP , CHIP	180PF 50V J	1	EA
C795	CCUS1H181JA	CAP , CHIP	180PF 50V J	1	EA
C796	CCUS1H104KC	CAP , CHIP	0.1UF 50V K	1	EA
C797	CCUS1H104KC	CAP , CHIP	0.1UF 50V K	1	EA
C798	CCUS1H104KC	CAP , CHIP	0.1UF 50V K	1	EA
C820	CCUS1H104KC	CAP , CHIP	0.1UF 50V K	1	EA
C261	CCEA1EH470T	CAP , ELECT	47UF 25V	1	EA
C262	CCEA1EH470T	CAP , ELECT	47UF 25V	1	EA
C263	CCEA1EH470T	CAP , ELECT	47UF 25V	1	EA
C264	CCEA1EH470T	CAP , ELECT	47UF 25V	1	EA
C265	CCEA1EH470T	CAP , ELECT	47UF 25V	1	EA
C266	CCEA1EH470T	CAP , ELECT	47UF 25V	1	EA
C267	CCEA1EH470T	CAP , ELECT	47UF 25V	1	EA
C268	CCEA1EH470T	CAP , ELECT	47UF 25V	1	EA
C270	CCEA1HH100T	CAP , ELECT	10UF 50V	1	EA
C271	CCEA1HH100T	CAP , ELECT	10UF 50V	1	EA
C272	CCEA1HH100T	CAP , ELECT	10UF 50V	1	EA
C273	CCEA1HH100T	CAP , ELECT	10UF 50V	1	EA
C275	CCEA1HH100T	CAP , ELECT	10UF 50V	1	EA
C276	CCEA1HH100T	CAP , ELECT	10UF 50V	1	EA
C281	CCEA1HH100T	CAP , ELECT	10UF 50V	1	EA
C282	CCEA1HH100T	CAP , ELECT	10UF 50V	1	EA
C283	CCEA1HH100T	CAP , ELECT	10UF 50V	1	EA
C284	CCEA1HH100T	CAP , ELECT	10UF 50V	1	EA
C285	CCEA1HH100T	CAP , ELECT	10UF 50V	1	EA
C286	CCEA1HH100T	CAP , ELECT	10UF 50V	1	EA
C287	CCEA1HH100T	CAP , ELECT	10UF 50V	1	EA
C288	CCEA1HH100T	CAP , ELECT	10UF 50V	1	EA
C292	CCEA1CH101T	CAP , ELECT	100UF 16V	1	EA
C294	CCEA1CH101T	CAP , ELECT	100UF 16V	1	EA
C341	CCEA1HH100T	CAP , ELECT	10UF 50V	1	EA
C342	CCEA1HH100T	CAP , ELECT	10UF 50V	1	EA
C343	CCEA1HH100T	CAP , ELECT	10UF 50V	1	EA
C344	CCEA1HH100T	CAP , ELECT	10UF 50V	1	EA
C345	CCEA1HH100T	CAP , ELECT	10UF 50V	1	EA
C346	CCEA1HH100T	CAP , ELECT	10UF 50V	1	EA
C347	CCEA1HH100T	CAP , ELECT	10UF 50V	1	EA
C348	CCEA1HH100T	CAP , ELECT	10UF 50V	1	EA
C349	CCEA1CH101T	CAP , ELECT	100UF 16V	1	EA
C358	CCEA1CH101T	CAP , ELECT	100UF 16V	1	EA
C359	CCEA1CH101T	CAP , ELECT	100UF 16V	1	EA
C360	CCEA1CH101T	CAP , ELECT	100UF 16V	1	EA
C371	CCEA1HH100T	CAP , ELECT	10UF 50V	1	EA
C372	CCEA1HH100T	CAP , ELECT	10UF 50V	1	EA
C373	CCEA1HH100T	CAP , ELECT	10UF 50V	1	EA
C374	CCEA1HH100T	CAP , ELECT	10UF 50V	1	EA
C375	CCEA1HH100T	CAP , ELECT	10UF 50V	1	EA
C376	CCEA1HH100T	CAP , ELECT	10UF 50V	1	EA
C377	CCEA1HH100T	CAP , ELECT	10UF 50V	1	EA

Ref. Designator	Part Number	Description		Qty	
PCB , INPUT		**CUP12028**			
C378	CCEA1HH100T	CAP , ELECT	10UF 50V	1	EA
C389	CCEA1HH100T	CAP , ELECT	10UF 50V	1	EA
C390	CCEA1HH100T	CAP , ELECT	10UF 50V	1	EA
C600	CCEA1CH101T	CAP , ELECT	100UF 16V	1	EA
C602	CCEA1CH101T	CAP , ELECT	100UF 16V	1	EA
C604	CCEA1CH101T	CAP , ELECT	100UF 16V	1	EA
C606	CCEA1CH101T	CAP , ELECT	100UF 16V	1	EA
C608	CCEA1CH101T	CAP , ELECT	100UF 16V	1	EA
C610	CCEA1CH101T	CAP , ELECT	100UF 16V	1	EA
C612	CCEA1CH101T	CAP , ELECT	100UF 16V	1	EA
C614	CCEA1CH101T	CAP , ELECT	100UF 16V	1	EA
C616	CCEA1CH101T	CAP , ELECT	100UF 16V	1	EA
C618	CCEA1CH101T	CAP , ELECT	100UF 16V	1	EA
C620	CCEA1CH101T	CAP , ELECT	100UF 16V	1	EA
C622	CCEA1CH101T	CAP , ELECT	100UF 16V	1	EA
C624	CCEA1CH101T	CAP , ELECT	100UF 16V	1	EA
C626	CCEA1CH101T	CAP , ELECT	100UF 16V	1	EA
C628	CCEA1CH101T	CAP , ELECT	100UF 16V	1	EA
C630	CCEA1CH101T	CAP , ELECT	100UF 16V	1	EA
C703	CCEA1CH101T	CAP , ELECT	100UF 16V	1	EA
C706	CCEA1CH101T	CAP , ELECT	100UF 16V	1	EA
C715	CCEA1HH4R7T	CAP , ELECT	4.7UF 50V	1	EA
C717	CCEA1HH4R7T	CAP , ELECT	4.7UF 50V	1	EA
C720	CCEA1CH101T	CAP , ELECT	100UF 16V	1	EA
C721	CCEA1AH471T	CAP , ELECT	470UF 10V	1	EA
C724	CCEA1AH471T	CAP , ELECT	470UF 10V	1	EA
C726	CCEA1CH101T	CAP , ELECT	100UF 16V	1	EA
C728	CCEA1AH471T	CAP , ELECT	470UF 10V	1	EA
C730	CCEA1CH101T	CAP , ELECT	100UF 16V	1	EA
C737	CCEA1CH101T	CAP , ELECT	100UF 16V	1	EA
C740	CCEA1CH101T	CAP , ELECT	100UF 16V	1	EA
C749	CCEA1CH101T	CAP , ELECT	100UF 16V	1	EA
C750	CCEA1CH101T	CAP , ELECT	100UF 16V	1	EA
C752	CCEA1CH101T	CAP , ELECT	100UF 16V	1	EA
C753	CCEA1CH101T	CAP , ELECT	100UF 16V	1	EA
C764	CCEA0JH102T	CAP , ELECT	1000UF 6.3V	1	EA
C766	CCEA0JH102T	CAP , ELECT	1000UF 6.3V	1	EA
C732	CCEA0JKR3222E	CAP , ELECT	3300UF 6.3V	1	EA
Semiconductors					
D201	CVD1SS355T	DIODE , CHIP	1SS355T	1	EA
D203	CVD1SS355T	DIODE , CHIP	1SS355T	1	EA
D204	CVD1SS355T	DIODE , CHIP	1SS355T	1	EA
D206	CVD1SS355T	DIODE , CHIP	1SS355T	1	EA
D207	CVD1SS355T	DIODE , CHIP	1SS355T	1	EA
D208	CVD1SS355T	DIODE , CHIP	1SS355T	1	EA
D209	CVD1SS355T	DIODE , CHIP	1SS355T	1	EA
D210	CVD1SS355T	DIODE , CHIP	1SS355T	1	EA
D211	CVD1SS355T	DIODE , CHIP	1SS355T	1	EA
D212	CVD1SS355T	DIODE , CHIP	1SS355T	1	EA
D213	CVD1SS355T	DIODE , CHIP	1SS355T	1	EA
D214	CVD1SS355T	DIODE , CHIP	1SS355T	1	EA
D215	CVD1SS355T	DIODE , CHIP	1SS355T	1	EA
D216	CVD1SS355T	DIODE , CHIP	1SS355T	1	EA
D725	CVD1SS355T	DIODE , CHIP	1SS355T	1	EA
D727	CVD1SS355T	DIODE , CHIP	1SS355T	1	EA
IC20	CVINJW1197CFC2	I.C , VOL WITH INPUT SELECTOR	JRC(NJW1197CFC2)	1	EA
IC21	HVINJM2068MTE1	I.C , DUAL OP AMP	JRC(NJM2068M-TE1)	1	EA
IC22	HVINJM2068MTE1	I.C , DUAL OP AMP	JRC(NJM2068M-TE1)	1	EA
IC23	HVINJM2068MTE1	I.C , DUAL OP AMP	JRC(NJM2068M-TE1)	1	EA
IC24	HVINJM2068MTE1	I.C , DUAL OP AMP	JRC(NJM2068M-TE1)	1	EA
IC25	HVINJM2068MTE1	I.C , DUAL OP AMP	JRC(NJM2068M-TE1)	1	EA
IC31	HVINJM2068MTE1	I.C , DUAL OP AMP	JRC(NJM2068M-TE1)	1	EA
IC32	HVINJM2068MTE1	I.C , DUAL OP AMP	JRC(NJM2068M-TE1)	1	EA

Ref. Designator	Part Number	Description		Qty	
PCB , INPUT		**CUP12028**			
IC33	HVINJM2068MTE1	I.C , DUAL OP AMP	JRC(NJM2068M-TE1)	1	EA
IC34	HVINJM2068MTE1	I.C , DUAL OP AMP	JRC(NJM2068M-TE1)	1	EA
IC70	HVITC74VHC157FT	I.C , 2-CHANNEL MUX	ST(TC74VHC157FT)	1	EA
IC72	HVITC74HCU04AFN	IC , INVERTER	TC74HCU04AFN	1	EA
IC73	HVICS42528-CQ	I.C , CODEC + DIR	CIRRUS LOGIC(CS42528-C	1	EA
IC75	CVICS497004CQZ	I.C , DSP	CIRRUS LOGIC(CS497004C	1	EA
IC77	CVIM12L16161A5TG	I.C, 16MB SDRAM	ESMT(M12L16161A5TG)	1	EA
IC78	HVINJM2391DL133	I.C , CHIP REGULATOR (+3.3V)	JRC(NJM2391DL1-3.3)	1	EA
IC79	CVIKIA1117S18	I.C , REGULATOR(SOT-223)	KEC(KIA1117S18)	1	EA
IC80	CVITC74VCX541FT	I,C , OCTAL BUS BUFFER	TOSHIBA(TC74VCX841FT)	1	EA
IC88	CVIKIA1117S33	I.C , REGULATOR(SOT-223)	KEC(KIA1117S33)	1	EA
IC89	CVIM24C32WMN6TP	I.C , EEPROM (32 Kbit)	ST(M24C32WMN6TP)	1	EA
IC90	CVIT5CC1	I.C , FLASH U-COM	TOSHIBA(T5CC1)	1	EA
IC91	HVI74ACT04MTR	I.C , HEX INVERTER	ST(74ACT04MTR)	1	EA
IC94	CVIKIA1117S50	I.C , REGULATOR(SOT-223)	KEC(KIA1117S50)	1	EA
Q729	HVTKRC107S	TRANSISTOR , CHIP NPN	KRC107S	1	EA
Q730	HVTKRC107S	TRANSISTOR , CHIP NPN	KRC107S	1	EA
Q732	HVTKRC107S	TRANSISTOR , CHIP NPN	KRC107S	1	EA
Q734	HVTKRC107S	TRANSISTOR , PNP, CHIP	KRA107S	1	EA
Q738	CVTKRC103S	TRANSISTOR , PNP, CHIP	KRC103S	1	EA
D221	CVD1N4003ST	DIODE , RECT	1N4003	1	EA
D222	CVD1N4003ST	DIODE , RECT	1N4003	1	EA
D703	CVD1N4003ST	DIODE , RECT	1N4003	1	EA
D704	CVD1N4003SRT	DIODE , RECT	1N4003	1	EA
IC87	HVIRE5VT28CATZ	I.C , RESET	RESET	1	EA
Q301	HVTKTC2874BT	TRANSISTOR , MUTE NPN	KTC2874B	1	EA
Q302	HVTKTC2874BT	TRANSISTOR , MUTE NPN	KTC2874B	1	EA
Q303	HVTKTC2874BT	TRANSISTOR , MUTE NPN	KTC2874B	1	EA
Q304	HVTKTC2874BT	TRANSISTOR , MUTE NPN	KTC2874B	1	EA
Q305	HVTKTC2874BT	TRANSISTOR , MUTE NPN	KTC2874B	1	EA
Q306	HVTKTC2874BT	TRANSISTOR , MUTE NPN	KTC2874B	1	EA
Q307	HVTKTC2874BT	TRANSISTOR , MUTE NPN	KTC2874B	1	EA
Q308	HVTKTC2874BT	TRANSISTOR , MUTE NPN	KTC2874B	1	EA
Q311	HVTKTC2874BT	TRANSISTOR , MUTE NPN	KTC2874B	1	EA
Q731	HVTKSA1175YT	TRANSISTOR PNP	KSA1175Y(DEAD)	1	EA
Q733	HVTKSC2785YT	TRANSISTOR NPN	KSC2785Y	1	EA
IC36	HVIKIA7808API	I.C , REGULATOR +8V	KEC(KIA7808API)	1	EA
IC37	CVIKIA7908PI	I.C , REGULATOR(TO-220IS) -9V	KEC(KIA7908PI)	1	EA
IC71	25VF080B504CS2F	I.C , 8 Mbit SPI Serial Flash	SST(SST25VF080B-50-4C-S	1	EA
Resistors					
RN61	CRJ104DJ103T	RES , 4ARRAY (1608*4)	10K OHM/1608*4	1	EA
RN62	CRJ104DJ103T	RES , 4ARRAY (1608*4)	10K OHM/1608*4	1	EA
RN63	CRJ104DJ103T	RES , 4ARRAY (1608*4)	10K OHM/1608*4	1	EA
RN64	CRJ104DJ101T	RES , 4ARRAY (1608*4)	100 OHM/1608*4	1	EA
RN65	CRJ104DJ101T	RES , 4ARRAY (1608*4)	100 OHM/1608*4	1	EA
RN66	CRJ104DJ101T	RES , 4ARRAY (1608*4)	100 OHM/1608*4	1	EA
RN71	CRJ104DJ103T	RES , 4ARRAY (1608*4)	10K OHM/1608*4	1	EA
RN72	CRJ104DJ103T	RES , 4ARRAY (1608*4)	10K OHM/1608*4	1	EA
RN73	CRJ104DJ103T	RES , 4ARRAY (1608*4)	10K OHM/1608*4	1	EA
RN76	CRJ104DJ330T	RES , 4ARRAY (1608*4)	33 OHM/1608*4	1	EA
RN77	CRJ104DJ330T	RES , 4ARRAY (1608*4)	33 OHM/1608*4	1	EA
RN78	CRJ104DJ330T	RES , 4ARRAY (1608*4)	33 OHM/1608*4	1	EA
RN79	CRJ104DJ330T	RES , 4ARRAY (1608*4)	33 OHM/1608*4	1	EA
RN80	CRJ104DJ330T	RES , 4ARRAY (1608*4)	33 OHM/1608*4	1	EA
RN81	CRJ104DJ330T	RES , 4ARRAY (1608*4)	33 OHM/1608*4	1	EA
RN82	CRJ104DJ330T	RES , 4ARRAY (1608*4)	33 OHM/1608*4	1	EA
RN83	CRJ104DJ330T	RES , 4ARRAY (1608*4)	33 OHM/1608*4	1	EA
RN84	CRJ104DJ330T	RES , 4ARRAY (1608*4)	33 OHM/1608*4	1	EA
RN85	CRJ104DJ330T	RES , 4ARRAY (1608*4)	33 OHM/1608*4	1	EA
RN86	CRJ104DJ103T	RES , 4ARRAY (1608*4)	10K OHM/1608*4	1	EA
RN87	CRJ104DJ330T	RES , 4ARRAY (1608*4)	33 OHM/1608*4	1	EA
RN88	CRJ104DJ103T	RES , 4ARRAY (1608*4)	10K OHM/1608*4	1	EA
RN89	CRJ104DJ103T	RES , 4ARRAY (1608*4)	10K OHM/1608*4	1	EA

Ref. Designator	Part Number	Description		Qty	
PCB , INPUT		**CUP12028**			
RN90	CRJ104DJ330T	RES , 4ARRAY (1608*4)	33 OHM/1608*4	1	EA
RN91	CRJ104DJ330T	RES , 4ARRAY (1608*4)	33 OHM/1608*4	1	EA
RN92	CRJ104DJ101T	RES , 4ARRAY (1608*4)	10K OHM/1608*4	1	EA
RN93	CRJ104DJ330T	RES , 4ARRAY (1608*4)	33 OHM/1608*4	1	EA
R201	CRJ10DJ101T	RES , CHIP	100 OHM	1	EA
R202	CRJ10DJ101T	RES , CHIP	100 OHM	1	EA
R203	CRJ10DJ101T	RES , CHIP	100 OHM	1	EA
R204	CRJ10DJ101T	RES , CHIP	100 OHM	1	EA
R205	CRJ10DJ101T	RES , CHIP	100 OHM	1	EA
R206	CRJ10DJ101T	RES , CHIP	100 OHM	1	EA
R209	CRJ10DJ101T	RES , CHIP	100 OHM	1	EA
R210	CRJ10DJ101T	RES , CHIP	100 OHM	1	EA
R211	CRJ10DJ101T	RES , CHIP	100 OHM	1	EA
R212	CRJ10DJ101T	RES , CHIP	100 OHM	1	EA
R213	CRJ10DJ101T	RES , CHIP	100 OHM	1	EA
R214	CRJ10DJ101T	RES , CHIP	100 OHM	1	EA
R215	CRJ10DJ101T	RES , CHIP	100 OHM	1	EA
R216	CRJ10DJ101T	RES , CHIP	100 OHM	1	EA
R219	CRJ10DJ101T	RES , CHIP	100 OHM	1	EA
R220	CRJ10DJ101T	RES , CHIP	100 OHM	1	EA
R221	CRJ10DJ101T	RES , CHIP	100 OHM	1	EA
R222	CRJ10DJ101T	RES , CHIP	100 OHM	1	EA
R223	CRJ10DJ101T	RES , CHIP	100 OHM	1	EA
R224	CRJ10DJ272T	RES , CHIP	2.7K OHM	1	EA
R225	CRJ10DJ101T	RES , CHIP	100 OHM	1	EA
R226	CRJ10DJ101T	RES , CHIP	100 OHM	1	EA
R227	CRJ10DJ474T	RES , CHIP	470K OHM	1	EA
R228	CRJ10DJ474T	RES , CHIP	470K OHM	1	EA
R229	CRJ10DJ474T	RES , CHIP	470K OHM	1	EA
R230	CRJ10DJ474T	RES , CHIP	470K OHM	1	EA
R231	CRJ10DJ474T	RES , CHIP	470K OHM	1	EA
R232	CRJ10DJ474T	RES , CHIP	470K OHM	1	EA
R235	CRJ10DJ474T	RES , CHIP	470K OHM	1	EA
R236	CRJ10DJ474T	RES , CHIP	470K OHM	1	EA
R237	CRJ10DJ474T	RES , CHIP	470K OHM	1	EA
R238	CRJ10DJ474T	RES , CHIP	470K OHM	1	EA
R239	CRJ10DJ474T	RES , CHIP	470K OHM	1	EA
R240	CRJ10DJ474T	RES , CHIP	470K OHM	1	EA
R241	CRJ10DJ474T	RES , CHIP	470K OHM	1	EA
R242	CRJ10DJ474T	RES , CHIP	470K OHM	1	EA
R245	CRJ10DJ474T	RES , CHIP	470K OHM	1	EA
R246	CRJ10DJ474T	RES , CHIP	470K OHM	1	EA
R247	CRJ10DJ474T	RES , CHIP	470K OHM	1	EA
R248	CRJ10DJ474T	RES , CHIP	470K OHM	1	EA
R249	CRJ10DJ474T	RES , CHIP	470K OHM	1	EA
R250	CRJ10DJ103T	RES , CHIP	10K OHM	1	EA
R251	CRJ10DJ474T	RES , CHIP	470K OHM	1	EA
R252	CRJ10DJ474T	RES , CHIP	470K OHM	1	EA
R253	CRJ10DJ4R7T	RES , CHIP	4.7 OHM	1	EA
R254	CRJ10DJ4R7T	RES , CHIP	4.7 OHM	1	EA
R256	CRJ10DJ4R7T	RES , CHIP	4.7 OHM	1	EA
R257	CRJ10DJ4R7T	RES , CHIP	4.7 OHM	1	EA
R258	CRJ10DJ4R7T	RES , CHIP	4.7 OHM	1	EA
R259	CRJ10DJ4R7T	RES , CHIP	4.7 OHM	1	EA
R260	CRJ10DJ4R7T	RES , CHIP	4.7 OHM	1	EA
R261	CRJ10DJ184T	RES , CHIP	184K OHM	1	EA
R262	CRJ10DJ184T	RES , CHIP	184K OHM	1	EA
R263	CRJ10DJ184T	RES , CHIP	184K OHM	1	EA
R264	CRJ10DJ184T	RES , CHIP	184K OHM	1	EA
R265	CRJ10DJ184T	RES , CHIP	184K OHM	1	EA
R266	CRJ10DJ184T	RES , CHIP	184K OHM	1	EA
R267	CRJ10DJ184T	RES , CHIP	184K OHM	1	EA
R268	CRJ10DJ184T	RES , CHIP	184K OHM	1	EA
R271	CRJ10DJ242T	RES , CHIP	2.4K OHM	1	EA
R272	CRJ10DJ242T	RES , CHIP	2.4K OHM	1	EA

Ref. Designator	Part Number	Description		Qty	
PCB , INPUT		**CUP12028**			
R273	CRJ10DJ242T	RES , CHIP	2.4K OHM	1	EA
R274	CRJ10DJ222T	RES , CHIP	2.2K OHM	1	EA
R275	CRJ10DJ242T	RES , CHIP	2.4K OHM	1	EA
R276	CRJ10DJ242T	RES , CHIP	2.4K OHM	1	EA
R277	CRJ10DJ242T	RES , CHIP	2.4K OHM	1	EA
R278	CRJ10DJ242T	RES , CHIP	2.4K OHM	1	EA
R279	CRJ10DJ101T	RES , CHIP	100 OHM	1	EA
R280	CRJ10DJ101T	RES , CHIP	100 OHM	1	EA
R281	CRJ10DJ512T	RES , CHIP	5.1K OHM	1	EA
R282	CRJ10DJ512T	RES , CHIP	5.1K OHM	1	EA
R283	CRJ10DJ512T	RES , CHIP	5.1K OHM	1	EA
R284	CRJ10DJ912T	RES , CHIP	9.1K OHM	1	EA
R285	CRJ10DJ512T	RES , CHIP	5.1K OHM	1	EA
R286	CRJ10DJ512T	RES , CHIP	5.1K OHM	1	EA
R287	CRJ10DJ512T	RES , CHIP	5.1K OHM	1	EA
R288	CRJ10DJ512T	RES , CHIP	5.1K OHM	1	EA
R289	CRJ10DJ101T	RES , CHIP	100 OHM	1	EA
R290	CRJ10DJ101T	RES , CHIP	100 OHM	1	EA
R291	CRJ10DJ184T	RES , CHIP	180K OHM	1	EA
R292	CRJ10DJ184T	RES , CHIP	180K OHM	1	EA
R293	CRJ10DJ184T	RES , CHIP	180K OHM	1	EA
R294	CRJ10DJ184T	RES , CHIP	180K OHM	1	EA
R295	CRJ10DJ184T	RES , CHIP	180K OHM	1	EA
R296	CRJ10DJ184T	RES , CHIP	180K OHM	1	EA
R297	CRJ10DJ184T	RES , CHIP	180K OHM	1	EA
R298	CRJ10DJ184T	RES , CHIP	180K OHM	1	EA
R301	CRJ10DJ122T	RES , CHIP	1.2K OHM	1	EA
R302	CRJ10DJ122T	RES , CHIP	1.2K OHM	1	EA
R303	CRJ10DJ122T	RES , CHIP	1.2K OHM	1	EA
R304	CRJ10DJ122T	RES , CHIP	1.2K OHM	1	EA
R305	CRJ10DJ272T	RES , CHIP	2.7K OHM	1	EA
R306	CRJ10DJ272T	RES , CHIP	2.7K OHM	1	EA
R307	CRJ10DJ272T	RES , CHIP	2.7K OHM	1	EA
R308	CRJ10DJ272T	RES , CHIP	2.7K OHM	1	EA
R309	CRJ10DJ272T	RES , CHIP	2.7K OHM	1	EA
R310	CRJ10DJ272T	RES , CHIP	2.7K OHM	1	EA
R311	CRJ10DJ272T	RES , CHIP	2.7K OHM	1	EA
R312	CRJ10DJ272T	RES , CHIP	2.7K OHM	1	EA
R313	CRJ10DJ272T	RES , CHIP	2.7K OHM	1	EA
R314	CRJ10DJ272T	RES , CHIP	2.7K OHM	1	EA
R315	CRJ10DJ272T	RES , CHIP	2.7K OHM	1	EA
R316	CRJ10DJ272T	RES , CHIP	2.7K OHM	1	EA
R317	CRJ10DJ561T	RES , CHIP	560 OHM	1	EA
R318	CRJ10DJ392T	RES . CHIP	3.9K OHM	1	EA
R321	CRJ10DJ512T	RES , CHIP	5.1 OHM	1	EA
R322	CRJ10DJ122T	RES , CHIP	1.2 OHM	1	EA
R323	CRJ10DJ122T	RES , CHIP	1.2 OHM	1	EA
R324	CRJ10DJ512T	RES , CHIP	5.1 OHM	1	EA
R325	CRJ10DJ512T	RES , CHIP	5.1 OHM	1	EA
R326	CRJ10DJ122T	RES , CHIP	1.2 OHM	1	EA
R327	CRJ10DJ122T	RES , CHIP	1.2 OHM	1	EA
R328	CRJ10DJ103T	RES , CHIP	10K OHM	1	EA
R329	CRJ10DJ512T	RES , CHIP	5.1K OHM	1	EA
R330	CRJ10DJ122T	RES , CHIP	1.2K OHM	1	EA
R331	CRJ10DJ122T	RES , CHIP	1.2K OHM	1	EA
R332	CRJ10DJ512T	RES , CHIP	5.1K OHM	1	EA
R333	CRJ10DJ512T	RES , CHIP	5.1K OHM	1	EA
R334	CRJ10DJ122T	RES , CHIP	1.2K OHM	1	EA
R335	CRJ10DJ122T	RES , CHIP	1.2K OHM	1	EA
R336	CRJ10DJ512T	RES , CHIP	5.1K OHM	1	EA
R341	CRJ10DJ122T	RES , CHIP	1.2K OHM	1	EA
R344	CRJ10DJ122T	RES , CHIP	1.2K OHM	1	EA
R345	CRJ10DJ122T	RES , CHIP	1.2K OHM	1	EA
R348	CRJ10DJ122T	RES , CHIP	1.2K OHM	1	EA
R349	CRJ10DJ122T	RES , CHIP	1.2K OHM	1	EA

Ref. Designator	Part Number	Description		Qty	
PCB , INPUT		**CUP12028**			
R352	CRJ10DJ122T	RES , CHIP	1.2K OHM	1	EA
R353	CRJ10DJ122T	RES , CHIP	1.2K OHM	1	EA
R356	CRJ10DJ122T	RES , CHIP	1.2K OHM	1	EA
R361	CRJ10DJ104T	RES , CHIP	100K OHM	1	EA
R362	CRJ10DJ104T	RES , CHIP	100K OHM	1	EA
R363	CRJ10DJ104T	RES , CHIP	100K OHM	1	EA
R364	CRJ10DJ104T	RES , CHIP	100K OHM	1	EA
R365	CRJ10DJ104T	RES , CHIP	100K OHM	1	EA
R366	CRJ10DJ104T	RES , CHIP	100K OHM	1	EA
R367	CRJ10DJ104T	RES , CHIP	100K OHM	1	EA
R368	CRJ10DJ104T	RES , CHIP	100K OHM	1	EA
R371	CRJ10DJ512T	RES , CHIP	5.1K OHM	1	EA
R372	CRJ10DJ512T	RES , CHIP	5.1K OHM	1	EA
R373	CRJ10DJ512T	RES , CHIP	5.1K OHM	1	EA
R374	CRJ10DJ103T	RES , CHIP	10K OHM	1	EA
R375	CRJ10DJ512T	RES , CHIP	5.1K OHM	1	EA
R376	CRJ10DJ512T	RES , CHIP	5.1K OHM	1	EA
R377	CRJ10DJ512T	RES , CHIP	5.1K OHM	1	EA
R378	CRJ10DJ512T	RES , CHIP	5.1K OHM	1	EA
R381	CRJ10DJ561T	RES , CHIP	560 OHM	1	EA
R382	CRJ10DJ561T	RES , CHIP	560 OHM	1	EA
R383	CRJ10DJ561T	RES , CHIP	560 OHM	1	EA
R384	CRJ10DJ561T	RES , CHIP	560 OHM	1	EA
R385	CRJ10DJ561T	RES , CHIP	560 OHM	1	EA
R386	CRJ10DJ561T	RES , CHIP	560 OHM	1	EA
R387	CRJ10DJ561T	RES , CHIP	560 OHM	1	EA
R388	CRJ10DJ561T	RES , CHIP	560 OHM	1	EA
R389	CRJ10DJ184T	RES , CHIP	180K OHM	1	EA
R390	CRJ10DJ184T	RES , CHIP	180K OHM	1	EA
R391	CRJ10DJ392T	RES . CHIP	3.9K OHM	1	EA
R392	CRJ10DJ392T	RES . CHIP	3.9K OHM	1	EA
R393	CRJ10DJ392T	RES . CHIP	3.9K OHM	1	EA
R394	CRJ10DJ392T	RES . CHIP	3.9K OHM	1	EA
R395	CRJ10DJ392T	RES . CHIP	3.9K OHM	1	EA
R396	CRJ10DJ392T	RES . CHIP	3.9K OHM	1	EA
R397	CRJ10DJ392T	RES . CHIP	3.9K OHM	1	EA
R398	CRJ10DJ392T	RES . CHIP	3.9K OHM	1	EA
R531	CRJ10DJ152T	RES , CHIP	1.5K OHM	1	EA
R532	CRJ10DJ152T	RES , CHIP	1.5K OHM	1	EA
R533	CRJ10DJ152T	RES , CHIP	1.5K OHM	1	EA
R534	CRJ10DJ152T	RES , CHIP	1.5K OHM	1	EA
R700	CRJ10DJ330T	RES , CHIP	33 OHM	1	EA
R701	CRJ10DJ103T	RES , CHIP	10K OHM	1	EA
R702	CRJ10DJ103T	RES , CHIP	10K OHM	1	EA
R704	CRJ10DJ103T	RES , CHIP	10K OHM	1	EA
R709	CRJ10DJ103T	RES , CHIP	10K OHM	1	EA
R710	CRJ10DJ103T	RES , CHIP	2.2K OHM	1	EA
R711	CRJ10DJ560T	RES , CHIP	2.2K OHM	1	EA
R712	CRJ10DJ820T	RES , CHIP	82 OHM	1	EA
R713	CRJ10DJ101T	RES , CHIP	100 OHM	1	EA
R714	CRJ10DJ104T	RES , CHIP	100K OHM	1	EA
R715	CRJ10DJ104T	RES , CHIP	100K OHM	1	EA
R716	CRJ10DJ472T	RES , CHIP	4.7K OHM	1	EA
R717	CRJ10DJ0R0T	RES , CHIP	0 OHM	1	EA
R718	CRJ10DJ332T	RES , CHIP	3.3K OHM	1	EA
R719	CRJ10DJ0R0T	RES , CHIP	0 OHM	1	EA
R720	CRJ10DJ0R0T	RES , CHIP	0 OHM	1	EA
R721	CRJ10DJ330T	RES , CHIP	33 OHM	1	EA
R724	CRJ10DJ101T	RES , CHIP	100 OHM	1	EA
R725	CRJ10DJ0R0T	RES , CHIP	0 OHM	1	EA
R726	CRJ10DJ100T	RES , CHIP	10 OHM	1	EA
R727	CRJ10DJ0R0T	RES , CHIP	0 OHM	1	EA
R728	CRJ10DJ102T	RES , CHIP	1K OHM	1	EA
R729	CRJ10DJ102T	RES , CHIP	1K OHM	1	EA
R730	CRJ10DJ102T	RES , CHIP	1K OHM	1	EA

Ref. Designator	Part Number	Description		Qty	
PCB , INPUT		**CUP12028**			
R731	CRJ10DJ102T	RES , CHIP	1K OHM	1	EA
R732	CRJ10DJ103T	RES , CHIP	10K OHM	1	EA
R733	CRJ10DJ100T	RES , CHIP	10 OHM	1	EA
R736	CRJ10DJ241T	RES , CHIP	240 OHM	1	EA
R737	CRJ10DJ330T	RES , CHIP	33 OHM	1	EA
R738	CRJ10DJ103T	RES , CHIP	10K OHM	1	EA
R739	CRJ10DJ0R0T	RES , CHIP	0 OHM	1	EA
R740	CRJ10DJ330T	RES , CHIP	33 OHM	1	EA
R741	CRJ10DJ330T	RES , CHIP	33 OHM	1	EA
R742	CRJ10DJ330T	RES , CHIP	33 OHM	1	EA
R743	CRJ10DJ330T	RES , CHIP	33 OHM	1	EA
R747	CRJ10DJ330T	RES , CHIP	33 OHM	1	EA
R748	CRJ10DJ330T	RES , CHIP	33 OHM	1	EA
R749	CRJ10DJ750T	RES , CHIP	75 OHM	1	EA
R751	CRJ10DJ820T	RES , CHIP	82 OHM	1	EA
R752	CRJ10DJ330T	RES , CHIP	33 OHM	1	EA
R753	CRJ10DJ103T	RES , CHIP	100K OHM	1	EA
R754	CRJ10DJ103T	RES , CHIP	100K OHM	1	EA
R755	CRJ10DJ750T	RES , CHIP	75 OHM	1	EA
R756	CRJ10DJ750T	RES , CHIP	75 OHM	1	EA
R757	CRJ10DJ750T	RES , CHIP	75 OHM	1	EA
R758	CRJ10DJ103T	RES , CHIP	100K OHM	1	EA
R759	CRJ10DJ820T	RES , CHIP	82 OHM	1	EA
R760	CRJ10DJ105T	RES , CHIP	1M OHM	1	EA
R761	CRJ10DJ102T	RES , CHIP	1K OHM	1	EA
R762	CRJ10DJ102T	RES , CHIP	1K OHM	1	EA
R763	CRJ10DJ472T	RES , CHIP	4.7K OHM	1	EA
R765	CRJ10DJ103T	RES , CHIP	100K OHM	1	EA
R766	CRJ10DJ103T	RES , CHIP	100K OHM	1	EA
R767	CRJ10DF5101T	RES. CHIP (5.1K 1%)	5.1K OHM 1%	1	EA
R768	CRJ10DJ0R0T	RES , CHIP	0 OHM	1	EA
R770	CRJ10DJ100T	RES , CHIP	10 OHM	1	EA
R771	CRJ10DJ103T	RES , CHIP	10K OHM	1	EA
R772	CRJ10DJ473T	RES , CHIP	47K OHM	1	EA
R773	CRJ10DJ332T	RES , CHIP	3.3K OHM	1	EA
R774	CRJ10DJ332T	RES , CHIP	3.3K OHM	1	EA
R775	CRJ10DJ332T	RES , CHIP	3.3K OHM	1	EA
R776	CRJ10DJ332T	RES , CHIP	3.3K OHM	1	EA
R777	CRJ10DJ101T	RES , CHIP	100 OHM	1	EA
R778	CRJ10DJ103T	RES , CHIP	10K OHM	1	EA
R779	CRJ10DJ103T	RES , CHIP	10K OHM	1	EA
R780	CRJ10DJ103T	RES , CHIP	10K OHM	1	EA
R781	CRJ10DJ103T	RES , CHIP	10K OHM	1	EA
R782	CRJ10DJ272T	RES , CHIP	2.7K OHM	1	EA
R783	CRJ10DJ272T	RES , CHIP	2.7K OHM	1	EA
R784	CRJ10DJ473T	RES , CHIP	47K OHM	1	EA
R785	CRJ10DJ104T	RES , CHIP	100K OHM	1	EA
R786	CRJ10DJ471T	RES , CHIP	470 OHM	1	EA
R787	CRJ10DJ103T	RES , CHIP	10K OHM	1	EA
R788	CRJ10DJ103T	RES , CHIP	10K OHM	1	EA
R789	CRJ10DJ103T	RES , CHIP	10K OHM	1	EA
R790	CRJ10DJ103T	RES , CHIP	10K OHM	1	EA
R792	CRJ10DJ103T	RES , CHIP	10K OHM	1	EA
R799	CRJ10DJ103T	RES , CHIP	10K OHM	1	EA
R800	CRJ10DJ332T	RES , CHIP	3.3K OHM	1	EA
R801	CRJ10DJ332T	RES , CHIP	3.3K OHM	1	EA
R802	CRJ10DJ103T	RES , CHIP	10K OHM	1	EA
R810	CRJ10DJ103T	RES , CHIP	10K OHM	1	EA
R811	CRJ10DJ103T	RES , CHIP	10K OHM	1	EA
R812	CRJ10DJ103T	RES , CHIP	10K OHM	1	EA
R813	CRJ10DJ330T	RES , CHIP	33 OHM	1	EA
R814	CRJ10DJ330T	RES , CHIP	33 OHM	1	EA
R815	CRJ10DJ330T	RES , CHIP	33 OHM	1	EA
R816	CRJ10DJ330T	RES , CHIP	33 OHM	1	EA

Ref. Designator	Part Number	Description		Qty	
PCB , INPUT		**CUP12028**			
Miscellaneous					
L701	CLZ9Z014Z	FERRITE , CHIP BEAD(60ohm, 4516)	HCB4516KF-600T60	1	EA
L702	CLZ9Z014Z	FERRITE , CHIP BEAD(60ohm, 4516)	HCB4516KF-600T60	1	EA
L703	CLZ9Z014Z	FERRITE , CHIP BEAD(60ohm, 4516)	HCB4516KF-600T60	1	EA
L704	CLZ9R005Z	FERRITE , CHIP BEAD(60ohm, 1608)	HCB1608KF-600T30	1	EA
L705	CLZ9R005Z	FERRITE , CHIP BEAD(60ohm, 1608)	HCB1608KF-600T30	1	EA
X702	HOX27000E180S	CRYSTAL , CHIP(27MHZ,SMD)	27MHz	1	EA
CN11	CJP17GA193ZY	WAFER, CARD CABLE (SMD)	WAFER	1	EA
CN15	CJP17GA193ZY	WAFER, CARD CABLE (SMD)	WAFER	1	EA
CN10	CJP05GB46ZY	WAFER	WAFER	1	EA
CN12	CJP21GA115ZY	WAFER , CARD CABLE	WAFER	1	EA
CN13	CJP13GA115ZY	WAFER , CARD CABLE	WAFER	1	EA
CN14	CJP13GA117ZY	WAFER , CARD CABLE	WAFER	1	EA
CN17	CJP06GB142ZB	PIN HEADER(6P, 2.54mm)	HEADER	1	EA
CN18	CJP05GA19ZY	WAFER , STRAIGHT	WAFER	1	EA
CN19	CJP09GA117ZY	WAFER	WAFER	1	EA
CN20	CJP05GA01ZY	WAFER(YMW025-05R)	WAFER	1	EA
CN21	CJP07GA117ZY	WAFER	WAFER	1	EA
CN22	CJP07GA19ZY	WAFER , STRAIGHT(7PIN)	WAFER	1	EA
CN72	CJP17GA117ZY	WAFER	WAFER	1	EA
JK11	CJJ4R019W	TERMINAL , IN/OUT	JACK	1	EA
JK12	CJJ4P014W	JACK , IN/OUT	JACK	1	EA
JK13	CJJ4R019W	TERMINAL , IN/OUT	JACK	1	EA
JK14	CJJ4R037W	JACK , BOARD	JACK	1	EA
JK78	CJJ4S022Z	JACK , BOARD	JACK	1	EA
X701	HOX24576E150TF	CRYSTAL	24.576MHz	1	EA
PCB , VIDEO		**CUP12033**			
Capacitors					
C409	CCUS1H104KC	CAP , CHIP	0.1UF 50V K	1	EA
C419	CCUS1H104KC	CAP , CHIP	0.1UF 50V K	1	EA
C425	CCUS1H102KC	CAP , CHIP	1000PF 50V K	1	EA
C455	CCUS1H104KC	CAP , CHIP	0.1UF 50V K	1	EA
C456	CCUS1H104KC	CAP , CHIP	0.1UF 50V K	1	EA
C459	CCUS1H102KC	CAP , CHIP	1000PF 50V K	1	EA
C460	CCUS1H102KC	CAP , CHIP	1000PF 50V K	1	EA
C461	CCUS1H223KC	CAP , CHIP	0.022UF 50V K	1	EA
C463	CCUS1H223KC	CAP , CHIP	0.022UF 50V K	1	EA
C465	CCUS1H470JA	CAP , CHIP	47PF 50V J	1	EA
C466	CCUS1H223KC	CAP , CHIP	0.022UF 50V K	1	EA
C468	CCUS1H223KC	CAP , CHIP	0.022UF 50V K	1	EA
C470	CCUS1H470JA	CAP , CHIP	47PF 50V J	1	EA
C471	CCUS1H223KC	CAP , CHIP	0.022UF 50V K	1	EA
C473	CCUS1H223KC	CAP , CHIP	0.022UF 50V K	1	EA
C475	CCUS1H470JA	CAP , CHIP	47PF 50V J	1	EA
C476	CCUS1H223KC	CAP , CHIP	0.022UF 50V K	1	EA
C477	CCUS1H271JA	CAP , CHIP	270PF 50V J	1	EA
C478	CCUS1H271JA	CAP , CHIP	270PF 50V J	1	EA
C481	CCUS1H102KC	CAP , CHIP	1000PF 50V K	1	EA
C482	CCUS1H102KC	CAP , CHIP	1000PF 50V K	1	EA
C483	CCUS1H102KC	CAP , CHIP	1000PF 50V K	1	EA
C484	CCUS1H104KC	CAP , CHIP	0.1UF 50V K	1	EA
C489	CCUS1H104KC	CAP , CHIP	0.1UF 50V K	1	EA
C491	CCUS1H101JA	CAP , CHIP	100PF 50V J	1	EA
C492	CCUS1H101JA	CAP , CHIP	100PF 50V J	1	EA
C493	CCUS1H101JA	CAP , CHIP	100PF 50V J	1	EA
C494	CCUS1H331JA	CAP , CHIP	330PF 50V J	1	EA
C495	CCUS1H331JA	CAP , CHIP	330PF 50V J	1	EA
C496	CCUS1H223KC	CAP , CHIP	0.022UF 50V K	1	EA
C497	CCUS1H122KC	CAP , CHIP	1200PF 50V K	1	EA
C498	CCUS1H122KC	CAP , CHIP	1200PF 50V K	1	EA
C500	CCUS1H104KC	CAP , CHIP	0.1UF 50V K	1	EA

Ref. Designator	Part Number	Description		Qty	
PCB , VIDEO		**CUP12033**			
C501	CCUS1H104KC	CAP , CHIP	0.1UF 50V K	1	EA
C502	CCUS1H104KC	CAP , CHIP	0.1UF 50V K	1	EA
C503	CCUS1H104KC	CAP , CHIP	0.1UF 50V K	1	EA
C504	CCUS1H181JA	CAP , CHIP	180PF 50V J	1	EA
C505	CCUS1H104KC	CAP , CHIP	0.1UF 50V K	1	EA
C506	CCUS1H104KC	CAP , CHIP	0.1UF 50V K	1	EA
C507	CCUS1H104KC	CAP , CHIP	0.1UF 50V K	1	EA
C508	CCUS1H104KC	CAP , CHIP	0.1UF 50V K	1	EA
C509	CCUS1H104KC	CAP , CHIP	0.1UF 50V K	1	EA
C510	CCUS1H104KC	CAP , CHIP	0.1UF 50V K	1	EA
C511	CCUS1H104KC	CAP , CHIP	0.1UF 50V K	1	EA
C517	CCUS1H104KC	CAP , CHIP	0.1UF 50V K	1	EA
C518	CCUS1H104KC	CAP , CHIP	0.1UF 50V K	1	EA
C525	CCUS1H104KC	CAP , CHIP	0.1UF 50V K	1	EA
C570	CCUS1H180JA	CAP , CHIP	18PF 50V J	1	EA
C571	CCUS1H180JA	CAP , CHIP	18PF 50V J	1	EA
C572	CCUS1H104KC	CAP , CHIP	0.1UF 50V K	1	EA
C601	CCUS1H020CA	CAP , CHIP	2PF 50V C	1	EA
C603	CCUS1H020CA	CAP , CHIP	2PF 50V C	1	EA
C605	CCUS1H020CA	CAP , CHIP	2PF 50V C	1	EA
C611	CCUS1H220JA	CAP , CHIP	22PF 50V J	1	EA
C613	CCUS1H220JA	CAP , CHIP	22PF 50V J	1	EA
C615	CCUS1H220JA	CAP , CHIP	22PF 50V J	1	EA
C621	CCUS1H220JA	CAP , CHIP	22PF 50V J	1	EA
C623	CCUS1H220JA	CAP , CHIP	22PF 50V J	1	EA
C625	CCUS1H220JA	CAP , CHIP	22PF 50V J	1	EA
C404	CCEA0JH102T	CAP , ELECT	1000UF 6.3V	1	EA
C405	CCEA1HH100T	CAP , ELECT	10UF 50V	1	EA
C406	CCEA0JH102T	CAP , ELECT	1000UF 6.3V	1	EA
C408	CCEA1CH101T	CAP , ELECT	100UF 16V	1	EA
C411	CCEA1HH100T	CAP , ELECT	10UF 50V	1	EA
C412	CCEA1HH100T	CAP , ELECT	10UF 50V	1	EA
C413	CCEA1HH100T	CAP , ELECT	10UF 50V	1	EA
C414	CCEA1CKS100T	CAP , ELECT	10UF 16V	1	EA
C415	CCEA1CKS100T	CAP , ELECT	10UF 16V	1	EA
C418	CCEA1CH101T	CAP , ELECT	100UF 16V	1	EA
C421	CCEA1HH100T	CAP , ELECT	10UF 50V	1	EA
C422	CCEA1HH100T	CAP , ELECT	10UF 50V	1	EA
C423	CCEA1HH100T	CAP , ELECT	10UF 50V	1	EA
C450	CCEA1CKS100T	CAP , ELECT	10UF 16V	1	EA
C451	CCEA1HH100T	CAP , ELECT	10UF 50V	1	EA
C452	CCEA1HH100T	CAP , ELECT	10UF 50V	1	EA
C453	CCEA1HH100T	CAP , ELECT	10UF 50V	1	EA
C457	CCEA1CKS100T	CAP , ELECT	10UF 16V	1	EA
C458	CCEA1CKS100T	CAP , ELECT	10UF 16V	1	EA
C462	CCEA1CH101T	CAP , ELECT	100UF 16V	1	EA
C464	CCEA1CH101T	CAP , ELECT	100UF 16V	1	EA
C467	CCEA1CH101T	CAP , ELECT	100UF 16V	1	EA
C469	CCEA1CH101T	CAP , ELECT	100UF 16V	1	EA
C472	CCEA1CH101T	CAP , ELECT	100UF 16V	1	EA
C474	CCEA1CH101T	CAP , ELECT	100UF 16V	1	EA
C480	CCEA1CKS220T	CAP , ELECT	22UF 16V SMALL SIZE	1	EA
C490	CCEA1CKS100T	CAP , ELECT	10UF 16V	1	EA
C499	CCEA1CKS100T	CAP , ELECT	10UF 16V	1	EA
C512	CCEA1CKS220T	CAP , ELECT	22UF 16V SMALL SIZE	1	EA
C521	CCEA1HH1R0T	CAP , ELECT	1UF 50V	1	EA
C522	CCEA1HH1R0T	CAP , ELECT	1UF 50V	1	EA
C526	CCEA1CKS101T	CAP , ELECT	100UF 16V	1	EA
C602	CCEA0JH102T	CAP , ELECT	1000UF 6.3V	1	EA
C604	CCEA0JH102T	CAP , ELECT	1000UF 6.3V	1	EA
C606	CCEA0JH102T	CAP , ELECT	1000UF 6.3V	1	EA
C527	CCKT1H221KB	CAP , CERAMIC	220PF 50V K	1	EA
C528	CCKT1H221KB	CAP , CERAMIC	220PF 50V K	1	EA

Ref. Designator	Part Number	Description		Qty	
PCB , VIDEO		**CUP12033**			
Semiconductors					
D404	HVDRB160L60TE25	DIODE , SCHOTTKEY BARRIER HK	RB160L-60TE25	1	EA
D500	CVD1SS355T	DIODE , CHIP	1SS355T	1	EA
D501	CVD1SS355T	DIODE , CHIP	1SS355T	1	EA
IC41	CVINJM2595MTE1	I.C , VIDEO S/W	JRC(NJM2595MTE1)	1	EA
IC42	CVINJM2595MTE1	I.C , VIDEO S/W	JRC(NJM2595MTE1)	1	EA
IC43	CVINJM2595MTE1	I.C , VIDEO S/W	JRC(NJM2595MTE1)	1	EA
IC51	CVIXMDTIC	I.C , XM V3B	XM(XMDTIC V3B)	1	EA
IC52	CVIAK4384ET	I.C , ADC	ASAHI KASEI (AK4384)	1	EA
IC53	HVINJM2068MTE1	I.C , DUAL OP AMP	JRC(NJM2068M-TE1)	1	EA
IC54	CVIKIA1117S33	I.C , REGULATOR(SOT-223)	KEC(KIA1117S33-RTK/P)	1	EA
Resistors					
RN50	CRJ104DJ220T	RES , 4ARRAY (1608*4)	22 OHM	1	EA
RN51	CRJ104DJ101T	RES , 4ARRAY (1608*4)	100 OHM	1	EA
RN52	CRJ102DJ220T	RES , 2ARRAY (1608*2)	22 OHM	1	EA
R401	CRJ10DJ0R0T	RES , CHIP	0 OHM	1	EA
R402	CRJ10DJ0R0T	RES , CHIP	0 OHM	1	EA
R403	CRJ10DJ0R0T	RES , CHIP	0 OHM	1	EA
R407	CRJ10DJ101T	RES , CHIP	100 OHM	1	EA
R408	CRJ10DJ102T	RES , CHIP	1K OHM	1	EA
R409	CRJ10DJ102T	RES , CHIP	1K OHM	1	EA
R411	CRJ10DJ750T	RES , CHIP	75 OHM	1	EA
R412	CRJ10DJ750T	RES , CHIP	75 OHM	1	EA
R413	CRJ10DJ750T	RES , CHIP	75 OHM	1	EA
R414	CRJ10DJ101T	RES , CHIP	100 OHM	1	EA
R415	CRJ10DJ0R0T	RES , CHIP	0 OHM	1	EA
R416	CRJ10DJ0R0T	RES , CHIP	0 OHM	1	EA
R417	CRJ10DJ0R0T	RES , CHIP	0 OHM	1	EA
R418	CRJ10DJ0R0T	RES , CHIP	0 OHM	1	EA
R419	CRJ10DJ0R0T	RES , CHIP	0 OHM	1	EA
R420	CRJ10DJ0R0T	RES , CHIP	0 OHM	1	EA
R421	CRJ10DJ750T	RES , CHIP	75 OHM	1	EA
R422	CRJ10DJ750T	RES , CHIP	75 OHM	1	EA
R423	CRJ10DJ750T	RES , CHIP	75 OHM	1	EA
R451	CRJ10DJ750T	RES , CHIP	75 OHM	1	EA
R452	CRJ10DJ750T	RES , CHIP	75 OHM	1	EA
R453	CRJ10DJ750T	RES , CHIP	75 OHM	1	EA
R462	CRJ10DJ750T	RES , CHIP	75 OHM	1	EA
R463	CRJ10DJ750T	RES , CHIP	75 OHM	1	EA
R467	CRJ10DJ750T	RES , CHIP	75 OHM	1	EA
R468	CRJ10DJ750T	RES , CHIP	75 OHM	1	EA
R472	CRJ10DJ750T	RES , CHIP	75 OHM	1	EA
R473	CRJ10DJ750T	RES , CHIP	75 OHM	1	EA
R474	CRJ10DJ332T	RES , CHIP	3.3K OHM	1	EA
R475	CRJ10DJ332T	RES , CHIP	3.3K OHM	1	EA
R476	CRJ10DJ332T	RES , CHIP	3.3K OHM	1	EA
R477	CRJ10DJ332T	RES , CHIP	3.3K OHM	1	EA
R478	CRJ10DJ104T	RES , CHIP	100K OHM	1	EA
R479	CRJ10DJ104T	RES , CHIP	100K OHM	1	EA
R481	CRJ10DJ103T	RES , CHIP	10K OHM	1	EA
R482	CRJ10DJ103T	RES , CHIP	10K OHM	1	EA
R483	CRJ10DJ152T	RES , CHIP	1.5K OHM	1	EA
R484	CRJ10DJ152T	RES , CHIP	1.5K OHM	1	EA
R486	CRJ10DJ103T	RES , CHIP	10K OHM	1	EA
R491	CRJ10DJ750T	RES , CHIP	75 OHM	1	EA
R492	CRJ10DJ750T	RES , CHIP	75 OHM	1	EA
R493	CRJ10DJ750T	RES , CHIP	75 OHM	1	EA
R500	CRJ10DJ4R7T	RES , CHIP	4.7 OHM	1	EA
R503	CRJ10CJ0R0T	RES , CHIP	0 OHM	1	EA
R504	CRJ10DJ4R7T	RES , CHIP	4.7 OHM	1	EA
R505	CRJ10DJ223T	RES , CHIP	22K OHM	1	EA
R506	CRJ10DJ102T	RES , CHIP	1K OHM	1	EA

Ref. Designator	Part Number	Description		Qty	
PCB , VIDEO		**CUP12033**			
R507	CRJ10DJ102T	RES , CHIP	1K OHM	1	EA
R508	CRJ10DJ101T	RES , CHIP	100 OHM	1	EA
R509	CRJ10DJ101T	RES , CHIP	100 OHM	1	EA
R510	CRJ10DJ104T	RES , CHIP	100K OHM	1	EA
R511	CRJ10DJ104T	RES , CHIP	100K OHM	1	EA
R512	CRJ10DJ104T	RES , CHIP	100K OHM	1	EA
R513	CRJ10DJ104T	RES , CHIP	100K OHM	1	EA
R514	CRJ10DJ223T	RES , CHIP	22K OHM	1	EA
R515	CRJ10DJ223T	RES , CHIP	22K OHM	1	EA
R516	CRJ10DJ223T	RES , CHIP	22K OHM	1	EA
R519	CRJ10DJ0R0T	RES , CHIP	0 OHM	1	EA
R521	CRJ10DJ223T	RES , CHIP	22K OHM	1	EA
R522	CRJ10DJ223T	RES , CHIP	22K OHM	1	EA
R523	CRJ10DJ223T	RES , CHIP	22K OHM	1	EA
R524	CRJ10DJ0R0T	RES , CHIP	0 OHM	1	EA
R525	CRJ10DJ105T	RES , CHIP	1M OHM	1	EA
R526	CRJ10DJ103T	RES , CHIP	10K OHM	1	EA
R527	CRJ10DJ0R0T	RES , CHIP	0 OHM	1	EA
R528	CRJ10DJ223T	RES , CHIP	22K OHM	1	EA
R529	CRJ10DJ223T	RES , CHIP	22K OHM	1	EA
R530	CRJ10DJ223T	RES , CHIP	22K OHM	1	EA
R581	CRJ10DJ101T	RES , CHIP	10K OHM	1	EA
R582	CRJ10DJ101T	RES , CHIP	10K OHM	1	EA
R583	CRJ10DJ474T	RES , CHIP	47K OHM	1	EA
R584	CRJ10DJ474T	RES , CHIP	47K OHM	1	EA
R601	CRJ10DJ0R0T	RES , CHIP	0 OHM	1	EA
R603	CRJ10DJ0R0T	RES , CHIP	0 OHM	1	EA
R605	CRJ10DJ0R0T	RES , CHIP	0 OHM	1	EA
R611	CRJ10DJ750T	RES , CHIP	75 OHM	1	EA
R612	CRJ10DJ750T	RES , CHIP	75 OHM	1	EA
R613	CRJ10DJ750T	RES , CHIP	75 OHM	1	EA
R621	CRJ10DJ750T	RES , CHIP	75 OHM	1	EA
R622	CRJ10DJ750T	RES , CHIP	75 OHM	1	EA
R623	CRJ10DJ750T	RES , CHIP	75 OHM	1	EA
Miscellaneous					
X501	COX45158E180S	X-TAL, 45.1584MHz (SMD)	45.1584MHz	1	EA
L403	CLZ9Z014Z	FERRITE , CHIP BEAD(60ohm, 4516)	HCB4516KF-600T60	1	EA
L502	CLQ06E2R7KRZ	INDUCTOR , CHIP	2.7UH	1	EA
L503	CLZ9Z014Z	FERRITE , CHIP BEAD(60ohm, 4516)	HCB4516KF-600T60	1	EA
L504	CLZ9Z014Z	FERRITE , CHIP BEAD(60ohm, 4516)	HCB4516KF-600T60	1	EA
BN14	CJP13GA117ZY	WAFER , CARD CABLE	WAFER	1	EA
BN19	CJP09GA117ZY	WAFER	WAFER	1	EA
BN21	CJP07GA117ZY	WAFER	WAFER	1	EA
BN42	CJP06GB142ZB	PIN HEADER(6P, 2.54mm)	PIN HEADER	1	EA
BN81	CJP34TT215ZB	PIN HEADER , DUAL ROW	PIN HEADER	1	EA
CN41	CJP07GA19ZY	WAFER , STRAIGHT(7PIN)	WAFER	1	EA
CN42	CJP06GB143ZB	FEMALE HEADER(6P, 2.54mm)	PIN HEADER	1	EA
CN43	CJP05GA01ZY	WAFER(YMW025-05R)	WAFER	1	EA
CN47	CJP07GA117ZY	WAFER	WAFER	1	EA
JK40	CJJ9P003Z	JACK , S-VIDEO+CVBS	JACK	1	EA
JK41	CJJ9R001Z	JACK , S-VIDEO+CVBS	JACK	1	EA
JK43	CJJ2D008Z	JACK , STEREO	JACK	1	EA
JK51	CJJ9L006Z	JACK , XM	JACK	1	EA
JK62	CJJ4R045Z	JACK , BOARD	JACK	1	EA
JK69	CJJ4S030Z	JACK , BOARD	JACK	1	EA
HDMI PCB		**(CUP12035)**			
Capacitors					
C601	CCUS1H104KC	CAP , CHIP	0.1UF 50V K	1	EA
C602	CCUS1H104KC	CAP , CHIP	0.1UF 50V K	1	EA
C603	CCUS1H104KC	CAP , CHIP	0.1UF 50V K	1	EA

Ref. Designator	Part Number	Description		Qty	
HDMI PCB		**(CUP12035)**			
C604	CCUS1H104KC	CAP , CHIP	0.1UF 50V K	1	EA
C605	CCUS1H104KC	CAP , CHIP	0.1UF 50V K	1	EA
C606	CCUS1H104KC	CAP , CHIP	0.1UF 50V K	1	EA
C607	CCUS1H104KC	CAP , CHIP	0.1UF 50V K	1	EA
C610	CCUS1H104KC	CAP , CHIP	0.1UF 50V K	1	EA
C611	CCUS1H104KC	CAP , CHIP	0.1UF 50V K	1	EA
C612	CCUS1H104KC	CAP , CHIP	0.1UF 50V K	1	EA
C613	CCUS1H104KC	CAP , CHIP	0.1UF 50V K	1	EA
C614	CCUS1H104KC	CAP , CHIP	0.1UF 50V K	1	EA
C615	CCUS1H104KC	CAP , CHIP	0.1UF 50V K	1	EA
C616	CCUS1H104KC	CAP , CHIP	0.1UF 50V K	1	EA
C617	CCUS1H104KC	CAP , CHIP	0.1UF 50V K	1	EA
C618	CCUS1H104KC	CAP , CHIP	0.1UF 50V K	1	EA
C619	CCUS1H104KC	CAP , CHIP	0.1UF 50V K	1	EA
C620	CCUS1H104KC	CAP , CHIP	0.1UF 50V K	1	EA
C621	CCUS1H104KC	CAP , CHIP	0.1UF 50V K	1	EA
C622	CCSJA0J220B	CAP , CHIP TANTAL(A TYPE, ELNA)	22UF 6.3V	1	EA
C623	CCUS1H104KC	CAP , CHIP	0.1UF 50V K	1	EA
C624	CCSJA0J220B	CAP , CHIP TANTAL(A TYPE, ELNA)	22UF 6.3V	1	EA
C625	CCUS1H104KC	CAP , CHIP	0.1UF 50V K	1	EA
C626	CCSJA0J220B	CAP , CHIP TANTAL(A TYPE, ELNA)	22UF 6.3V	1	EA
C627	CCUS1H104KC	CAP , CHIP	0.1UF 50V K	1	EA
C628	CCSJA0J220B	CAP , CHIP TANTAL(A TYPE, ELNA)	22UF 6.3V	1	EA
C629	CCUS1H104KC	CAP , CHIP	0.1UF 50V K	1	EA
C634	CCSJA1C100B	CAP , CHIP TANTAL(A TYPE, ELNA)	10UF 16V	1	EA
C635	CCUS1H104KC	CAP , CHIP	0.1UF 50V K	1	EA
C636	CCSJA1C100B	CAP , CHIP TANTAL(A TYPE, ELNA)	10UF 16V	1	EA
C637	CCUS1H104KC	CAP , CHIP	0.1UF 50V K	1	EA
C638	CCSJA1C100B	CAP , CHIP TANTAL(A TYPE, ELNA)	10UF 16V	1	EA
C639	CCUS1H104KC	CAP , CHIP	0.1UF 50V K	1	EA
C640	CCSJA1C100B	CAP , CHIP TANTAL(A TYPE, ELNA)	10UF 16V	1	EA
C641	CCUS1H104KC	CAP , CHIP	0.1UF 50V K	1	EA
C642	CCUS1H123KC	CAP , CHIP(1608, 50V/12NF)	0.012UF 50V	1	EA
C643	CCUS1C154KC	CAP , CHIP	0.15UF 16V K	1	EA
C644	CCSJA0J220B	CAP , CHIP TANTAL(A TYPE, ELNA)	22UF 6.3V	1	EA
C645	CCUS1H104KC	CAP , CHIP	0.1UF 50V K	1	EA
C646	CCSJA1C100B	CAP , CHIP TANTAL(A TYPE, ELNA)	10UF 16V	1	EA
C647	CCSJA0J220B	CAP , CHIP TANTAL(A TYPE, ELNA)	22UF 6.3V	1	EA
C648	CCUS1H104KC	CAP , CHIP	0.1UF 50V K	1	EA
C649	CCUS1H104KC	CAP , CHIP	0.1UF 50V K	1	EA
C652	CCUS1H103KC	CAP , CHIP	0.01UF 50V K	1	EA
C653	CCUI1C104KC	CAP , CHIP(1005, 16V/0.1UF)	0.1UF 16V	1	EA
C654	CCUI1C104KC	CAP , CHIP(1005, 16V/0.1UF)	0.1UF 16V	1	EA
C655	CCUI1C104KC	CAP , CHIP(1005, 16V/0.1UF)	0.1UF 16V	1	EA
C656	CCUI1C104KC	CAP , CHIP(1005, 16V/0.1UF)	0.1UF 16V	1	EA
C701	CCSJA1C100B	CAP , CHIP TANTAL(A TYPE, ELNA)	10UF 16V	1	EA
C702	CCUS1H104KC	CAP , CHIP	0.1UF 50V K	1	EA
C703	CCUS1H104KC	CAP , CHIP	0.1UF 50V K	1	EA
C704	CCSJA0J220B	CAP , CHIP TANTAL(A TYPE, ELNA)	22UF 6.3V	1	EA
C707	CCUS1H104KC	CAP , CHIP	0.1UF 50V K	1	EA
C708	CCSJA0J220B	CAP , CHIP TANTAL(A TYPE, ELNA)	22UF 6.3V	1	EA
C709	CCUS1H104KC	CAP , CHIP	0.1UF 50V K	1	EA
C710	CCSJA0J220B	CAP , CHIP TANTAL(A TYPE, ELNA)	22UF 6.3V	1	EA
C721	CCSJA0J220B	CAP , CHIP TANTAL(A TYPE, ELNA)	22UF 6.3V	1	EA
C722	CCUS1H104KC	CAP , CHIP	0.1UF 50V K	1	EA
C723	CCUS1H104KC	CAP , CHIP	0.1UF 50V K	1	EA
C724	CCSJA0J220B	CAP , CHIP TANTAL(A TYPE, ELNA)	22UF 6.3V	1	EA
C725	CCUS1H104KC	CAP , CHIP	0.1UF 50V K	1	EA
C726	CCUS1H104KC	CAP , CHIP	0.1UF 50V K	1	EA
C727	CCUS1A105KC	CAP , CHIP	1UF 10V K	1	EA
C728	CCSJA0J220B	CAP , CHIP TANTAL(A TYPE, ELNA)	22UF 6.3V	1	EA
C729	CCUS1A105KC	CAP , CHIP	1UF 10V K	1	EA
C730	CCSJA0J220B	CAP , CHIP TANTAL(A TYPE, ELNA)	22UF 6.3V	1	EA
C731	CCUS1H104KC	CAP , CHIP	0.1UF 50V K	1	EA
C732	CCSJA0J220B	CAP , CHIP TANTAL(A TYPE, ELNA)	22UF 6.3V	1	EA

Ref. Designator	Part Number	Description		Qty	
HDMI PCB		**(CUP12035)**			
C733	CCUS1H104KC	CAP , CHIP	0.1UF 50V K	1	EA
C734	CCUS1H104KC	CAP , CHIP	0.1UF 50V K	1	EA
C735	CCUS1H104KC	CAP , CHIP	0.1UF 50V K	1	EA
C736	CCSJA0J220B	CAP , CHIP TANTAL(A TYPE, ELNA)	22UF 6.3V	1	EA
C737	CCUS1H222KC	CAP , CHIP	2200PF 50V K	1	EA
C738	CCUS1H222KC	CAP , CHIP	2200PF 50V K	1	EA
C739	CCUS1H104KC	CAP , CHIP	0.1UF 50V K	1	EA
C740	CCUS1H123KC	CAP , CHIP(1608, 50V/12NF)	0.012UF 50V	1	EA
C741	CCUS1C154KC	CAP , CHIP	0.15UF 16V K	1	EA
C743	CCSJA0J220B	CAP , CHIP TANTAL(A TYPE, ELNA)	22UF 6.3V	1	EA
C744	CCUS1H104KC	CAP , CHIP	0.1UF 50V K	1	EA
C745	CCSJA0J220B	CAP , CHIP TANTAL(A TYPE, ELNA)	22UF 6.3V	1	EA
C746	CCUS1H104KC	CAP , CHIP	0.1UF 50V K	1	EA
C747	CCUS1H104KC	CAP , CHIP	0.1UF 50V K	1	EA
C748	CCSJA0J220B	CAP , CHIP TANTAL(A TYPE, ELNA)	22UF 6.3V	1	EA
C749	CCUS1H104KC	CAP , CHIP	0.1UF 50V K	1	EA
C750	CCSJA0J220B	CAP , CHIP TANTAL(A TYPE, ELNA)	22UF 6.3V	1	EA
C751	CCSJA1C100B	CAP , CHIP TANTAL(A TYPE, ELNA)	10UF 16V	1	EA
C752	CCUS1H104KC	CAP , CHIP	0.1UF 50V K	1	EA
C753	CCUS1H104KC	CAP , CHIP	0.1UF 50V K	1	EA
C754	CCSJA0J220B	CAP , CHIP TANTAL(A TYPE, ELNA)	22UF 6.3V	1	EA
C755	CCSJA0J220B	CAP , CHIP TANTAL(A TYPE, ELNA)	22UF 6.3V	1	EA
C756	CCSJA0J220B	CAP , CHIP TANTAL(A TYPE, ELNA)	22UF 6.3V	1	EA
C757	CCUS1H103KC	CAP , CHIP	0.01UF 50V K	1	EA
C758	CCUS1H103KC	CAP , CHIP	0.01UF 50V K	1	EA
C759	CCUI1C104KC	CAP , CHIP(1005, 16V/0.1UF)	0.1UF 16V	1	EA
C760	CCUS1H103KC	CAP , CHIP	0.01UF 50V K	1	EA
C761	CCUI1C104KC	CAP , CHIP(1005, 16V/0.1UF)	0.1UF 16V	1	EA
C762	CCUI1C104KC	CAP , CHIP(1005, 16V/0.1UF)	0.1UF 16V	1	EA
C763	CCUI1C104KC	CAP , CHIP(1005, 16V/0.1UF)	0.1UF 16V	1	EA
C764	CCUI1C104KC	CAP , CHIP(1005, 16V/0.1UF)	0.1UF 16V	1	EA
C765	CCUS1H103KC	CAP , CHIP	0.01UF 50V K	1	EA
C766	CCUI1C104KC	CAP , CHIP(1005, 16V/0.1UF)	0.1UF 16V	1	EA
C767	CCUS1H103KC	CAP , CHIP	0.01UF 50V K	1	EA
C768	CCUI1C104KC	CAP , CHIP(1005, 16V/0.1UF)	0.1UF 16V	1	EA
C769	CCUS1H103KC	CAP , CHIP	0.01UF 50V K	1	EA
C770	CCSJA0J220B	CAP , CHIP TANTAL(A TYPE, ELNA)	22UF 6.3V	1	EA
C771	CCUI1C104KC	CAP , CHIP(1005, 16V/0.1UF)	0.1UF 16V	1	EA
C772	CCUS1H103KC	CAP , CHIP	0.01UF 50V K	1	EA
C773	CCSJA0J220B	CAP , CHIP TANTAL(A TYPE, ELNA)	22UF 6.3V	1	EA
C774	CCUI1C104KC	CAP , CHIP(1005, 16V/0.1UF)	0.1UF 16V	1	EA
C775	CCUS1H103KC	CAP , CHIP	0.01UF 50V K	1	EA
C780	CCUI1C104KC	CAP , CHIP(1005, 16V/0.1UF)	0.1UF 16V	1	EA
C801	CCSJA0J220B	CAP , CHIP TANTAL(A TYPE, ELNA)	22UF 6.3V	1	EA
C802	CCSJA0J220B	CAP , CHIP TANTAL(A TYPE, ELNA)	22UF 6.3V	1	EA
C803	CCUI1C104KC	CAP , CHIP(1005, 16V/0.1UF)	0.1UF 16V	1	EA
C804	CCUI1C104KC	CAP , CHIP(1005, 16V/0.1UF)	0.1UF 16V	1	EA
C805	CCUI1C104KC	CAP , CHIP(1005, 16V/0.1UF)	0.1UF 16V	1	EA
C806	CCUI1C104KC	CAP , CHIP(1005, 16V/0.1UF)	0.1UF 16V	1	EA
C807	CCUI1C104KC	CAP , CHIP(1005, 16V/0.1UF)	0.1UF 16V	1	EA
C808	CCUI1C104KC	CAP , CHIP(1005, 16V/0.1UF)	0.1UF 16V	1	EA
C809	CCUI1C104KC	CAP , CHIP(1005, 16V/0.1UF)	0.1UF 16V	1	EA
C810	CCUI1C104KC	CAP , CHIP(1005, 16V/0.1UF)	0.1UF 16V	1	EA
C811	CCUI1C104KC	CAP , CHIP(1005, 16V/0.1UF)	0.1UF 16V	1	EA
C812	CCUI1C104KC	CAP , CHIP(1005, 16V/0.1UF)	0.1UF 16V	1	EA
C813	CCUI1C104KC	CAP , CHIP(1005, 16V/0.1UF)	0.1UF 16V	1	EA
C814	CCUI1C104KC	CAP , CHIP(1005, 16V/0.1UF)	0.1UF 16V	1	EA
C815	CCUI1C104KC	CAP , CHIP(1005, 16V/0.1UF)	0.1UF 16V	1	EA
C816	CCSJA0J220B	CAP , CHIP TANTAL(A TYPE, ELNA)	22UF 6.3V	1	EA
C817	CCUI1C104KC	CAP , CHIP(1005, 16V/0.1UF)	0.1UF 16V	1	EA
C818	CCUI1C104KC	CAP , CHIP(1005, 16V/0.1UF)	0.1UF 16V	1	EA
C819	CCUI1C104KC	CAP , CHIP(1005, 16V/0.1UF)	0.1UF 16V	1	EA
C820	CCUI1C104KC	CAP , CHIP(1005, 16V/0.1UF)	0.1UF 16V	1	EA
C821	CCSJA0J220B	CAP , CHIP TANTAL(A TYPE, ELNA)	22UF 6.3V	1	EA
C822	CCUI1C104KC	CAP , CHIP(1005, 16V/0.1UF)	0.1UF 16V	1	EA

Ref. Designator	Part Number	Description		Qty	
HDMI PCB		**(CUP12035)**			
C823	CCUI1C104KC	CAP , CHIP(1005, 16V/0.1UF)	0.1UF 16V	1	EA
C824	CCUI1C104KC	CAP , CHIP(1005, 16V/0.1UF)	0.1UF 16V	1	EA
C825	CCSJA0J220B	CAP , CHIP TANTAL(A TYPE, ELNA)	22UF 6.3V	1	EA
C826	CCUI1C104KC	CAP , CHIP(1005, 16V/0.1UF)	0.1UF 16V	1	EA
C827	CCUI1C104KC	CAP , CHIP(1005, 16V/0.1UF)	0.1UF 16V	1	EA
C828	CCUI1C104KC	CAP , CHIP(1005, 16V/0.1UF)	0.1UF 16V	1	EA
C829	CCUI1C104KC	CAP , CHIP(1005, 16V/0.1UF)	0.1UF 16V	1	EA
C830	CCUI1C104KC	CAP , CHIP(1005, 16V/0.1UF)	0.1UF 16V	1	EA
C831	CCUI1C104KC	CAP , CHIP(1005, 16V/0.1UF)	0.1UF 16V	1	EA
C832	CCSJA0J220B	CAP , CHIP TANTAL(A TYPE, ELNA)	22UF 6.3V	1	EA
C833	CCSJA0J220B	CAP , CHIP TANTAL(A TYPE, ELNA)	22UF 6.3V	1	EA
C834	CCUI1C104KC	CAP , CHIP(1005, 16V/0.1UF)	0.1UF 16V	1	EA
C835	CCUI1C104KC	CAP , CHIP(1005, 16V/0.1UF)	0.1UF 16V	1	EA
C836	CCUI1C104KC	CAP , CHIP(1005, 16V/0.1UF)	0.1UF 16V	1	EA
C837	CCUI1C104KC	CAP , CHIP(1005, 16V/0.1UF)	0.1UF 16V	1	EA
C838	CCUI1C104KC	CAP , CHIP(1005, 16V/0.1UF)	0.1UF 16V	1	EA
C839	CCUI1C104KC	CAP , CHIP(1005, 16V/0.1UF)	0.1UF 16V	1	EA
C840	CCUI1C104KC	CAP , CHIP(1005, 16V/0.1UF)	0.1UF 16V	1	EA
C841	CCUI1C104KC	CAP , CHIP(1005, 16V/0.1UF)	0.1UF 16V	1	EA
C842	CCUI1C104KC	CAP , CHIP(1005, 16V/0.1UF)	0.1UF 16V	1	EA
C843	CCUI1C104KC	CAP , CHIP(1005, 16V/0.1UF)	0.1UF 16V	1	EA
C844	CCUI1C104KC	CAP , CHIP(1005, 16V/0.1UF)	0.1UF 16V	1	EA
C845	CCUI1C104KC	CAP , CHIP(1005, 16V/0.1UF)	0.1UF 16V	1	EA
C846	CCUI1C104KC	CAP , CHIP(1005, 16V/0.1UF)	0.1UF 16V	1	EA
C847	CCUI1C104KC	CAP , CHIP(1005, 16V/0.1UF)	0.1UF 16V	1	EA
C848	CCUI1C104KC	CAP , CHIP(1005, 16V/0.1UF)	0.1UF 16V	1	EA
C849	CCSJA0J220B	CAP , CHIP TANTAL(A TYPE, ELNA)	22UF 6.3V	1	EA
C850	CCSJA0J220B	CAP , CHIP TANTAL(A TYPE, ELNA)	22UF 6.3V	1	EA
C851	CCUI1C104KC	CAP , CHIP(1005, 16V/0.1UF)	0.1UF 16V	1	EA
C852	CCUS1H103KC	CAP , CHIP	0.01UF 50V K	1	EA
C853	CCUI1C104KC	CAP , CHIP(1005, 16V/0.1UF)	0.1UF 16V	1	EA
C854	CCUS1H103KC	CAP , CHIP	0.01UF 50V K	1	EA
C855	CCUI1C104KC	CAP , CHIP(1005, 16V/0.1UF)	0.1UF 16V	1	EA
C856	CCUI1C104KC	CAP , CHIP(1005, 16V/0.1UF)	0.1UF 16V	1	EA
C857	CCUI1C104KC	CAP , CHIP(1005, 16V/0.1UF)	0.1UF 16V	1	EA
C858	CCUI1C104KC	CAP , CHIP(1005, 16V/0.1UF)	0.1UF 16V	1	EA
C859	CCUS1H103KC	CAP , CHIP	0.01UF 50V K	1	EA
C860	CCUI1C104KC	CAP , CHIP(1005, 16V/0.1UF)	0.1UF 16V	1	EA
C861	CCUS1H103KC	CAP , CHIP	0.01UF 50V K	1	EA
C862	CCUI1C104KC	CAP , CHIP(1005, 16V/0.1UF)	0.1UF 16V	1	EA
C863	CCUS1H103KC	CAP , CHIP	0.01UF 50V K	1	EA
C864	CCSJA0J220B	CAP , CHIP TANTAL(A TYPE, ELNA)	22UF 6.3V	1	EA
C865	CCUI1C104KC	CAP , CHIP(1005, 16V/0.1UF)	0.1UF 16V	1	EA
C866	CCUI1C104KC	CAP , CHIP(1005, 16V/0.1UF)	0.1UF 16V	1	EA
C867	CCUI1C104KC	CAP , CHIP(1005, 16V/0.1UF)	0.1UF 16V	1	EA
C868	CCSJA0J220B	CAP , CHIP TANTAL(A TYPE, ELNA)	22UF 6.3V	1	EA
C869	CCUI1C104KC	CAP , CHIP(1005, 16V/0.1UF)	0.1UF 16V	1	EA
C870	CCSJA0J220B	CAP , CHIP TANTAL(A TYPE, ELNA)	22UF 6.3V	1	EA
C871	CCUI1C104KC	CAP , CHIP(1005, 16V/0.1UF)	0.1UF 16V	1	EA
C872	CCUI1C104KC	CAP , CHIP(1005, 16V/0.1UF)	0.1UF 16V	1	EA
C873	CCUS1H104KC	CAP , CHIP	0.1UF 50V K	1	EA
C874	CCUS1H104KC	CAP , CHIP	0.1UF 50V K	1	EA
C875	CCUS1H104KC	CAP , CHIP	0.1UF 50V K	1	EA
C876	CCUS1H104KC	CAP , CHIP	0.1UF 50V K	1	EA
C877	CCUS1H104KC	CAP , CHIP	0.1UF 50V K	1	EA
C878	CCUS1H104KC	CAP , CHIP	0.1UF 50V K	1	EA
C879	CCUS1H104KC	CAP , CHIP	0.1UF 50V K	1	EA
C880	CCUS1H104KC	CAP , CHIP	0.1UF 50V K	1	EA
C881	CCUS1H104KC	CAP , CHIP	0.1UF 50V K	1	EA
C882	CCUS1H104KC	CAP , CHIP	0.1UF 50V K	1	EA
C883	CCUS1H104KC	CAP , CHIP	0.1UF 50V K	1	EA
C884	CCUS1H104KC	CAP , CHIP	0.1UF 50V K	1	EA
C885	CCUS1H104KC	CAP , CHIP	0.1UF 50V K	1	EA
C886	CCUS1H104KC	CAP , CHIP	0.1UF 50V K	1	EA
C887	CCUS1H104KC	CAP , CHIP	0.1UF 50V K	1	EA

Ref. Designator	Part Number	Description		Qty	
HDMI PCB		**(CUP12035)**			
C888	CCUS1H104KC	CAP , CHIP	0.1UF 50V K	1	EA
C889	CCUS1H104KC	CAP , CHIP	0.1UF 50V K	1	EA
C890	CCUS1H104KC	CAP , CHIP	0.1UF 50V K	1	EA
C891	CCUS1H104KC	CAP , CHIP	0.1UF 50V K	1	EA
C892	CCUS1H104KC	CAP , CHIP	0.1UF 50V K	1	EA
C893	CCUS1H470JA	CAP , CHIP	47PF 50V J	1	EA
C894	CCUS1H470JA	CAP , CHIP	47PF 50V J	1	EA
C895	CCUS1H104KC	CAP , CHIP	0.1UF 50V K	1	EA
C897	CCUS1H104KC	CAP , CHIP	0.1UF 50V K	1	EA
C898	CCUS1H104KC	CAP , CHIP	0.1UF 50V K	1	EA
C901	CCUS1H104KC	CAP , CHIP	0.1UF 50V K	1	EA
C902	CCUS1H104KC	CAP , CHIP	0.1UF 50V K	1	EA
C903	CCUS1H104KC	CAP , CHIP	0.1UF 50V K	1	EA
C904	CCUS1H104KC	CAP , CHIP	0.1UF 50V K	1	EA
C905	CCUS1H104KC	CAP , CHIP	0.1UF 50V K	1	EA
C906	CCUS1H104KC	CAP , CHIP	0.1UF 50V K	1	EA
C907	CCUS1H104KC	CAP , CHIP	0.1UF 50V K	1	EA
C908	CCUS1H104KC	CAP , CHIP	0.1UF 50V K	1	EA
C909	CCUS1H104KC	CAP , CHIP	0.1UF 50V K	1	EA
C910	CCUS1H104KC	CAP , CHIP	0.1UF 50V K	1	EA
C911	CCUS1H104KC	CAP , CHIP	0.1UF 50V K	1	EA
C912	CCUS1H104KC	CAP , CHIP	0.1UF 50V K	1	EA
C913	CCUS1H104KC	CAP , CHIP	0.1UF 50V K	1	EA
C914	CCUS1H104KC	CAP , CHIP	0.1UF 50V K	1	EA
C915	CCUS1H104KC	CAP , CHIP	0.1UF 50V K	1	EA
C916	CCUS1H104KC	CAP , CHIP	0.1UF 50V K	1	EA
C917	CCUS1H104KC	CAP , CHIP	0.1UF 50V K	1	EA
C918	CCUS1H104KC	CAP , CHIP	0.1UF 50V K	1	EA
C919	CCUS1H104KC	CAP , CHIP	0.1UF 50V K	1	EA
C920	CCUS1H104KC	CAP , CHIP	0.1UF 50V K	1	EA
C921	CCSJA0J220B	CAP , CHIP TANTAL(A TYPE, ELNA)	22UF 6.3V	1	EA
C922	CCSJA0J220B	CAP , CHIP TANTAL(A TYPE, ELNA)	22UF 6.3V	1	EA
C923	CCSJA0J220B	CAP , CHIP TANTAL(A TYPE, ELNA)	22UF 6.3V	1	EA
C924	CCUS1H104KC	CAP , CHIP	0.1UF 50V K	1	EA
C927	CCUS1H104KC	CAP , CHIP	0.1UF 50V K	1	EA
C928	CCUS1H104KC	CAP , CHIP	0.1UF 50V K	1	EA
C929	CCUS1H104KC	CAP , CHIP	0.1UF 50V K	1	EA
C930	CCUS1H104KC	CAP , CHIP	0.1UF 50V K	1	EA
C931	CCUS1H104KC	CAP , CHIP	0.1UF 50V K	1	EA
C932	CCUS1H104KC	CAP , CHIP	0.1UF 50V K	1	EA
C933	CCUS1H104KC	CAP , CHIP	0.1UF 50V K	1	EA
C934	CCUS1H104KC	CAP , CHIP	0.1UF 50V K	1	EA
C935	CCUS1H104KC	CAP , CHIP	0.1UF 50V K	1	EA
C936	CCUS1H104KC	CAP , CHIP	0.1UF 50V K	1	EA
C937	CCUS1H104KC	CAP , CHIP	0.1UF 50V K	1	EA
C938	CCUS1H104KC	CAP , CHIP	0.1UF 50V K	1	EA
C939	CCUS1H104KC	CAP , CHIP	0.1UF 50V K	1	EA
C940	CCUS1H104KC	CAP , CHIP	0.1UF 50V K	1	EA
C941	CCUS1H104KC	CAP , CHIP	0.1UF 50V K	1	EA
C942	CCUS1H104KC	CAP , CHIP	0.1UF 50V K	1	EA
C943	CCUS1H104KC	CAP , CHIP	0.1UF 50V K	1	EA
C944	CCUS1H104KC	CAP , CHIP	0.1UF 50V K	1	EA
C945	CCUS1H104KC	CAP , CHIP	0.1UF 50V K	1	EA
C946	CCUS1H104KC	CAP , CHIP	0.1UF 50V K	1	EA
C947	CCUS1H104KC	CAP , CHIP	0.1UF 50V K	1	EA
C948	CCUS1H104KC	CAP , CHIP	0.1UF 50V K	1	EA
C949	CCUS1H104KC	CAP , CHIP	0.1UF 50V K	1	EA
C950	CCUS1H104KC	CAP , CHIP	0.1UF 50V K	1	EA
C951	CCUS1H104KC	CAP , CHIP	0.1UF 50V K	1	EA
C952	CCUS1H104KC	CAP , CHIP	0.1UF 50V K	1	EA
C953	CCUS1H104KC	CAP , CHIP	0.1UF 50V K	1	EA
C954	CCUS1H104KC	CAP , CHIP	0.1UF 50V K	1	EA
C956	CCUS1H104KC	CAP , CHIP	0.1UF 50V K	1	EA
C957	CCUS1H104KC	CAP , CHIP	0.1UF 50V K	1	EA
C958	CCUS1H104KC	CAP , CHIP	0.1UF 50V K	1	EA

Ref. Designator	Part Number	Description		Qty	
HDMI PCB		**(CUP12035)**			
C959	CCUS1H104KC	CAP , CHIP	0.1UF 50V K	1	EA
C960	CCUS1H104KC	CAP , CHIP	0.1UF 50V K	1	EA
C961	CCUS1H104KC	CAP , CHIP	0.1UF 50V K	1	EA
C962	CCUS1H104KC	CAP , CHIP	0.1UF 50V K	1	EA
C963	CCUS1H104KC	CAP , CHIP	0.1UF 50V K	1	EA
C964	CCUS1H104KC	CAP , CHIP	0.1UF 50V K	1	EA
C965	CCUS1H180JA	CAP , CHIP(18PF/50V)	18PF 50V J	1	EA
C966	CCUS1H180JA	CAP , CHIP(18PF/50V)	18PF 50V J	1	EA
C967	CCUS1H104KC	CAP , CHIP	0.1UF 50V K	1	EA
C968	CCSJA0J220B	CAP , CHIP TANTAL(A TYPE, ELNA)	22UF 6.3V	1	EA
C969	CCSJA0J220B	CAP , CHIP TANTAL(A TYPE, ELNA)	22UF 6.3V	1	EA
C970	CCSJA0J220B	CAP , CHIP TANTAL(A TYPE, ELNA)	22UF 6.3V	1	EA
C971	CCSJA0J220B	CAP , CHIP TANTAL(A TYPE, ELNA)	22UF 6.3V	1	EA
C972	CCSJA0J220B	CAP , CHIP TANTAL(A TYPE, ELNA)	22UF 6.3V	1	EA
C973	CCSJA0J220B	CAP , CHIP TANTAL(A TYPE, ELNA)	22UF 6.3V	1	EA
C974	CCSJA0J220B	CAP , CHIP TANTAL(A TYPE, ELNA)	22UF 6.3V	1	EA
C975	CCSJA1C100B	CAP , CHIP TANTAL(A TYPE, ELNA)	10UF 16V	1	EA
C976	CCUS1H104KC	CAP , CHIP	0.1UF 50V K	1	EA
C977	CCUS1H104KC	CAP , CHIP	0.1UF 50V K	1	EA
C978	CCSJA0J220B	CAP , CHIP TANTAL(A TYPE, ELNA)	22UF 6.3V	1	EA
C979	CCSJA1C100B	CAP , CHIP TANTAL(A TYPE, ELNA)	10UF 16V	1	EA
C980	CCUS1H104KC	CAP , CHIP	0.1UF 50V K	1	EA
C981	CCUS1H104KC	CAP , CHIP	0.1UF 50V K	1	EA
C982	CCSJA0J220B	CAP , CHIP TANTAL(A TYPE, ELNA)	22UF 6.3V	1	EA
C983	CCSJA0J220B	CAP , CHIP TANTAL(A TYPE, ELNA)	22UF 6.3V	1	EA
C984	CCSJA0J220B	CAP , CHIP TANTAL(A TYPE, ELNA)	22UF 6.3V	1	EA
C634	CCFT1H104ZF	CAP , SEMICONDUCTOR	0.1UF	1	EA
C651	CCEA0JKR3222E	CAP , ELECT	2200UF 6.3V	1	EA
C657	CCEA0JKR3222E	CAP , ELECT	2200UF 6.3V	1	EA
Semiconductors					
D941	HVD1SR159-200	DIODE , SCHOTTKEY BARRIER	DIODE	1	EA
IC61	CVINJM2845DL118	IC, NJM2845DL1-18(TE1) REGULATOR	JRC(NJM2845DL1-18)	1	EA
IC62	HVINJM2391DL133	I.C , CHIP REGULATOR (+3.3V)	JRC(NJM2391DL1-33)	1	EA
IC63	CVIKIA1117S50	I.C , REGULATOR(SOT-223)	KEC(KIA1117S50-RTK/P)	1	EA
IC64	CVIKIA1117S50	I.C , REGULATOR(SOT-223)	KEC(KIA1117S50-RTK/P)	1	EA
IC65	CVINJM2845DL118	IC, NJM2845DL1-18(TE1) REGULATOR	JRC(NJM2845DL1-18)	1	EA
IC71	CVINJM2566V	I.C , NJM2566AV(TE1) 6 CHAN VIDEO AMP	JRC(NJM2566AV)	1	EA
IC72	CVIADV7342BSTZ	I.C , VIDEO ENCODER	ANLOG DEVICE(ADV7342B	1	EA
IC73	CVIMK2302S01T	I.C , BUFFER	IDT(MK23020S-01T)	1	EA
IC74	CVINJM2845DL133	I.C , REGULATOR(3.3V, TO-252-3)	JRC(NJM2845DL1-13)	1	EA
IC75	CVIA3S56D40ETPG5	I.C, 256MB DDR SDRAM	ZENTEL(A3S56D40ETPG5)	1	EA
IC76	CVIA3S56D40ETPG5	I.C, 256MB DDR SDRAM	ZENTEL(A3S56D40ETPG5)	1	EA
IC77	CVIES29LV320ET70TG	I.C , FLASH ROM 32Mbit IC	EXCEL SEMI(ES29LV320ET	1	EA
IC81	CVIFLI30336AC	I.C , VIDEO PROCESSOR	GENESIS(FLI30336)	1	EA
IC82	CVIST232CDR	IC , RS232C(SO-16TYPE)	ST(ST232CDR)	1	EA
IC84	HVIKIC7SZ08FU	I.C ,INPUT AND GATE (USV PCKG)	KEC(KIC7SZ08FU-RTK)	1	EA
IC87	HVINJM2391DL125	I.C , CHIP REGULATOR (+2.5V)	JRC(NJM2391DL1-25)	1	EA
IC89	HVINJM2391DL133	I.C , CHIP REGULATOR (+3.3V)	JRC(NJM2391DL1-13)	1	EA
IC91	CVITC74VHCT14AFT	I.C , HEX SCHMITT INVERTER(14PIN, TSSOP)	TOSHIBA(TC74VHC14AFT)	1	EA
IC92	CVISII9185CTU	IC , HDMI SW(80PIN, TQFP)	SILICON IMAGE(SII9185CTU	1	EA
IC93	CVISII9135CTU	IC , HDMI RX(144PIN, TQFP)	SILICON IMAGE(SII9135CTU	1	EA
IC94	CVISII9134CTU	IC , HDMI TX(100PIN, TQFP)	SILICON IMAGE(SII9134CTU	1	EA
IC95	HVIKIC7SZ08FU	I.C ,INPUT AND GATE (USV PACKAGE)	KEC(KIC7SZ08FU-RTK)	1	EA
IC96	CVITC74VCX541FT	I,C , OCTAL BUS BUFFER	TOSHIBA(TC74VCX541FT)	1	EA
Q801	HVTKRC114S	TRANSISTOR , PNP, CHIP	KRC114S	1	EA
Q901	HVTKRA102S	TRANSISTOR , PNP, CHIP	KRA102S	1	EA
Q902	CVTKRC103S	TRANSISTOR , PNP, CHIP	KRC103S	1	EA
Q903	CVTUPA672T	F.E.T	UPA672T	1	EA
Q904	HVTKRA102S	TRANSISTOR , PNP, CHIP	KRA102S	1	EA
Q905	CVTKRC103S	TRANSISTOR , PNP, CHIP	KRC103S	1	EA
Q906	CVTUPA672T	F.E.T	UPA672T	1	EA
Q907	HVTKRA102S	TRANSISTOR , PNP, CHIP	KRA102S	1	EA
Q908	CVTKRC103S	TRANSISTOR , PNP, CHIP	KRC103S	1	EA

Ref. Designator	Part Number	Description		Qty	
HDMI PCB		**(CUP12035)**			
Q909	HVTKRC111S	TRANSISTOR , CHIP	KRC111S	1	EA
Q910	CVTUPA672T	F.E.T	UPA672T	1	EA
Q911	CVTKRC103S	TRANSISTOR , PNP, CHIP	KRC103S	1	EA
Q912	CVTUPA672T	F.E.T	UPA672T	1	EA
Resistors					
RN31	CRJ064IJ330T	RES , CHIP NETWORK(1/16W, 33ohm,X4)	MNR04M0APJ330	1	EA
RN32	CRJ064IJ330T	RES , CHIP NETWORK(1/16W, 33ohm,X4)	MNR04M0APJ330	1	EA
RN33	CRJ064IJ330T	RES , CHIP NETWORK(1/16W, 33ohm,X4)	MNR04M0APJ330	1	EA
RN34	CRJ064IJ330T	RES , CHIP NETWORK(1/16W, 33ohm,X4)	MNR04M0APJ330	1	EA
RN35	CRJ064IJ330T	RES , CHIP NETWORK(1/16W, 33ohm,X4)	MNR04M0APJ330	1	EA
RN36	CRJ064IJ330T	RES , CHIP NETWORK(1/16W, 33ohm,X4)	MNR04M0APJ330	1	EA
RN37	CRJ064IJ330T	RES , CHIP NETWORK(1/16W, 33ohm,X4)	MNR04M0APJ330	1	EA
RN38	CRJ064IJ330T	RES , CHIP NETWORK(1/16W, 33ohm,X4)	MNR04M0APJ330	1	EA
RN39	CRJ064IJ330T	RES , CHIP NETWORK(1/16W, 33ohm,X4)	MNR04M0APJ330	1	EA
RN40	CRJ064IJ330T	RES , CHIP NETWORK(1/16W, 33ohm,X4)	MNR04M0APJ330	1	EA
RN41	CRJ104DJ220T	RES,4ARRAY	22 OHM/1608*4	1	EA
RN42	CRJ104DJ220T	RES,4ARRAY	22 OHM/1608*4	1	EA
RN43	CRJ104DJ220T	RES,4ARRAY	22 OHM/1608*4	1	EA
RN44	CRJ104DJ220T	RES,4ARRAY	22 OHM/1608*4	1	EA
RN45	CRJ064IJ330T	RES , CHIP NETWORK(1/16W, 33ohm,X4)	MNR04M0APJ330	1	EA
RN46	CRJ064IJ330T	RES , CHIP NETWORK(1/16W, 33ohm,X4)	MNR04M0APJ330	1	EA
RN47	CRJ064IJ330T	RES , CHIP NETWORK(1/16W, 33ohm,X4)	MNR04M0APJ330	1	EA
RN48	CRJ064IJ330T	RES , CHIP NETWORK(1/16W, 33ohm,X4)	MNR04M0APJ330	1	EA
RN49	CRJ064IJ330T	RES , CHIP NETWORK(1/16W, 33ohm,X4)	MNR04M0APJ330	1	EA
RN50	CRJ064IJ330T	RES , CHIP NETWORK(1/16W, 33ohm,X4)	MNR04M0APJ330	1	EA
RN51	CRJ064IJ330T	RES , CHIP NETWORK(1/16W, 33ohm,X4)	MNR04M0APJ330	1	EA
RN52	CRJ064IJ330T	RES , CHIP NETWORK(1/16W, 33ohm,X4)	MNR04M0APJ330	1	EA
RN54	CRJ064IJ330T	RES , CHIP NETWORK(1/16W, 33ohm,X4)	MNR04M0APJ330	1	EA
RN55	CRJ064IJ330T	RES , CHIP NETWORK(1/16W, 33ohm,X4)	MNR04M0APJ330	1	EA
RN56	CRJ064IJ330T	RES , CHIP NETWORK(1/16W, 33ohm,X4)	MNR04M0APJ330	1	EA
RN61	CRJ064IJ330T	RES , CHIP NETWORK(1/16W, 33ohm,X4)	MNR04M0APJ330	1	EA
RN62	CRJ104DJ100T	RES, ARRAY, 10R (1608)	10 OHM/1608*4	1	EA
RN63	CRJ104DJ100T	RES, ARRAY, 10R (1608)	10 OHM/1608*4	1	EA
RN64	CRJ104DJ100T	RES, ARRAY, 10R (1608)	10 OHM/1608*4	1	EA
RN65	CRJ104DJ100T	RES, ARRAY, 10R (1608)	10 OHM/1608*4	1	EA
RN66	CRJ104DJ100T	RES, ARRAY, 10R (1608)	10 OHM/1608*4	1	EA
RN67	CRJ104DJ100T	RES, ARRAY, 10R (1608)	10 OHM/1608*4	1	EA
RN68	CRJ104DJ100T	RES, ARRAY, 10R (1608)	10 OHM/1608*4	1	EA
RN69	CRJ104DJ103T	RES, ARRAY, 10K (1608)	10K OHM/1608*4	1	EA
RN70	CRJ104DJ103T	RES, ARRAY, 10K (1608)	10K OHM/1608*4	1	EA
RN71	CRJ062IJ330T	RES , CHIP NETWORK(1/16W, 33ohm, X2)	33 OHM 1/16W	1	EA
RN72	CRJ062IJ330T	RES , CHIP NETWORK(1/16W, 33ohm, X2)	33 OHM 1/16W	1	EA
RN73	CRJ062IJ330T	RES , CHIP NETWORK(1/16W, 33ohm, X2)	33 OHM 1/16W	1	EA
RN74	CRJ062IJ330T	RES , CHIP NETWORK(1/16W, 33ohm, X2)	33 OHM 1/16W	1	EA
RN75	CRJ062IJ330T	RES , CHIP NETWORK(1/16W, 33ohm, X2)	33 OHM 1/16W	1	EA
RN81	CRJ104DJ103T	RES, ARRAY, 10K (1608)	10K OHM/1608*4	1	EA
RN82	CRJ064IJ330T	RES , CHIP NETWORK(1/16W, 33ohm,X4)	33 OHM 1/16W	1	EA
RN83	CRJ064IJ330T	RES , CHIP NETWORK(1/16W, 33ohm,X4)	33 OHM 1/16W	1	EA
RN84	CRJ064IJ330T	RES , CHIP NETWORK(1/16W, 33ohm,X4)	33 OHM 1/16W	1	EA
RN85	CRJ064IJ330T	RES , CHIP NETWORK(1/16W, 33ohm,X4)	33 OHM 1/16W	1	EA
RN86	CRJ064IJ330T	RES , CHIP NETWORK(1/16W, 33ohm,X4)	33 OHM 1/16W	1	EA
RN87	CRJ064IJ330T	RES , CHIP NETWORK(1/16W, 33ohm,X4)	33 OHM 1/16W	1	EA
RN88	CRJ064IJ330T	RES , CHIP NETWORK(1/16W, 33ohm,X4)	33 OHM 1/16W	1	EA
RN89	CRJ064IJ330T	RES , CHIP NETWORK(1/16W, 33ohm,X4)	33 OHM 1/16W	1	EA
RN90	CRJ064IJ330T	RES , CHIP NETWORK(1/16W, 33ohm,X4)	33 OHM 1/16W	1	EA
RN91	CRJ064IJ330T	RES , CHIP NETWORK(1/16W, 33ohm,X4)	33 OHM 1/16W	1	EA
RN92	CRJ064IJ330T	RES , CHIP NETWORK(1/16W, 33ohm,X4)	33 OHM 1/16W	1	EA
RN93	CRJ064IJ330T	RES , CHIP NETWORK(1/16W, 33ohm,X4)	33 OHM 1/16W	1	EA
RN94	CRJ064IJ330T	RES , CHIP NETWORK(1/16W, 33ohm,X4)	33 OHM 1/16W	1	EA
R801	CRJ10DJ470T	RES , CHIP	47 OHM	1	EA
R802	CRJ10DJ470T	RES , CHIP	47 OHM	1	EA
R803	CRJ10DJ470T	RES , CHIP	47 OHM	1	EA
R804	CRJ10DJ820T	RES , CHIP	82 OHM	1	EA

Ref. Designator	Part Number	Description		Qty	
HDMI PCB		**(CUP12035)**			
R805	CRJ10DJ820T	RES , CHIP	82 OHM	1	EA
R806	CRJ10DJ820T	RES , CHIP	82 OHM	1	EA
R807	CRJ10DJ820T	RES , CHIP	82 OHM	1	EA
R808	CRJ10DJ470T	RES , CHIP	47 OHM	1	EA
R809	CRJ10DJ820T	RES , CHIP	82 OHM	1	EA
R810	CRJ10DJ470T	RES , CHIP	47 OHM	1	EA
R811	CRJ10DJ820T	RES , CHIP	82 OHM	1	EA
R812	CRJ10DJ470T	RES , CHIP	47 OHM	1	EA
R813	CRJ10DJ470T	RES , CHIP	47 OHM	1	EA
R814	CRJ10DJ820T	RES , CHIP	82 OHM	1	EA
R815	CRJ10DJ820T	RES , CHIP	82 OHM	1	EA
R816	CRJ10DJ820T	RES , CHIP	82 OHM	1	EA
R817	CRJ10DJ470T	RES , CHIP	47 OHM	1	EA
R818	CRJ10DJ470T	RES , CHIP	47 OHM	1	EA
R819	CRJ10DJ470T	RES , CHIP	47 OHM	1	EA
R820	CRJ10DJ820T	RES , CHIP	82 OHM	1	EA
R821	CRJ10DJ103T	RES , CHIP	10K OHM	1	EA
R822	CRJ10DJ103T	RES , CHIP	10K OHM	1	EA
R823	CRJ10DJ103T	RES , CHIP	10K OHM	1	EA
R824	CRJ10DJ0R0T	RES , CHIP	0 OHM	1	EA
R825	CRJ10DJ103T	RES , CHIP	10K OHM	1	EA
R826	CRJ10DJ103T	RES , CHIP	10K OHM	1	EA
R827	CRJ10DJ103T	RES , CHIP	10K OHM	1	EA
R832	CRJ10DJ103T	RES , CHIP	10K OHM	1	EA
R838	CRJ10DJ750T	RES , CHIP	75 OHM	1	EA
R839	CRJ10DJ750T	RES , CHIP	75 OHM	1	EA
R840	CRJ10DJ750T	RES , CHIP	75 OHM	1	EA
R841	CRJ10DJ750T	RES , CHIP	75 OHM	1	EA
R842	CRJ10DJ750T	RES , CHIP	75 OHM	1	EA
R843	CRJ10DJ750T	RES , CHIP	75 OHM	1	EA
R844	CRJ10DJ103T	RES , CHIP	10K OHM	1	EA
R845	CRJ10DJ103T	RES , CHIP	10K OHM	1	EA
R846	CRJ10DJ103T	RES , CHIP	10K OHM	1	EA
R847	CRJ10DJ103T	RES , CHIP	10K OHM	1	EA
R848	CRJ10DJ301T	RES , CHIP	300 OHM	1	EA
R849	CRJ10DJ301T	RES , CHIP	300 OHM	1	EA
R850	CRJ10DJ301T	RES , CHIP	300 OHM	1	EA
R851	CRJ10DJ301T	RES , CHIP	300 OHM	1	EA
R852	CRJ10DJ301T	RES , CHIP	300 OHM	1	EA
R853	CRJ10DJ301T	RES , CHIP	300 OHM	1	EA
R854	CRJ10DF6801T	RES , CHIP	6.8K OHM 1%	1	EA
R855	CRJ10DF4301T	RES , CHIP	4.3K OHM 1%	1	EA
R856	CRJ10DJ221T	RES , CHIP	220 OHM	1	EA
R857	CRJ10DJ392T	RES , CHIP	3.9K OHM	1	EA
R858	CRJ10DJ151T	RES , CHIP	150 OHM	1	EA
R860	CRJ10DJ100T	RES , CHIP	10 OHM	1	EA
R861	CRJ10DJ100T	RES . CHIP	10 OHM	1	EA
R863	CRJ10DJ472T	RES , CHIP	4.7K OHM	1	EA
R864	CRJ10DF2800T	RES , CHIP	280 OHM 1%	1	EA
R865	CRJ10DF2800T	RES . CHIP	280 OHM 1%	1	EA
R867	CRJ10DF1002T	RES , CHIP	10K /1/10W/F	1	EA
R868	CRJ10DF1002T	RES , CHIP	10K /1/10W/F	1	EA
R869	CRJ10DJ103T	RES , CHIP	10K OHM	1	EA
R870	CRJ10DJ103T	RES , CHIP	10K OHM	1	EA
R871	CRJ10DJ103T	RES , CHIP	10K OHM	1	EA
R873	CRJ10DJ103T	RES , CHIP	10K OHM	1	EA
R874	CRJ10DJ103T	RES , CHIP	10K OHM	1	EA
R875	CRJ10DJ103T	RES , CHIP	10K OHM	1	EA
R876	CRJ10DJ103T	RES , CHIP	10K OHM	1	EA
R877	CRJ10DJ151T	RES , CHIP	150 OHM	1	EA
R878	CRJ10DJ0R0T	RES , CHIP	0 OHM	1	EA
R879	CRJ10DJ103T	RES , CHIP	10K OHM	1	EA
R880	CRJ10DJ103T	RES , CHIP	10K OHM	1	EA
R881	CRJ10DJ103T	RES , CHIP	10K OHM	1	EA
R882	CRJ10DJ103T	RES , CHIP	10K OHM	1	EA

Ref. Designator	Part Number	Description		Qty	
HDMI PCB		**(CUP12035)**			
R883	CRJ10DJ103T	RES , CHIP	10K OHM	1	EA
R884	CRJ10DJ103T	RES , CHIP	10K OHM	1	EA
R887	CRJ10DJ103T	RES , CHIP	10K OHM	1	EA
R892	CRJ10DJ103T	RES , CHIP	10K OHM	1	EA
R893	CRJ10DJ472T	RES , CHIP	4.7K OHM	1	EA
R894	CRJ10DJ472T	RES , CHIP	4.7K OHM	1	EA
R897	CRJ10DJ200T	RES , CHIP	20 OHM	1	EA
R898	CRJ10DJ200T	RES , CHIP	20 OHM	1	EA
R899	CRJ10DJ221T	RES , CHIP	220 OHM	1	EA
R900	CRJ10DJ392T	RES , CHIP	3.9K OHM	1	EA
R901	CRJ10DJ102T	RES , CHIP	1K OHM	1	EA
R902	CRJ10DJ223T	RES , CHIP	22K OHM	1	EA
R903	CRJ10DJ101T	RES , CHIP	100 OHM	1	EA
R904	CRJ10DJ473T	RES , CHIP	47K OHM	1	EA
R905	CRJ10DJ470T	RES , CHIP	47 OHM	1	EA
R906	CRJ10DJ470T	RES , CHIP	47 OHM	1	EA
R907	CRJ10DJ473T	RES , CHIP	47K OHM	1	EA
R908	CRJ10DJ103T	RES , CHIP	10K OHM	1	EA
R909	CRJ10DJ103T	RES , CHIP	10K OHM	1	EA
R910	CRJ10DJ473T	RES , CHIP	47K OHM	1	EA
R911	CRJ10DJ102T	RES , CHIP	1K OHM	1	EA
R912	CRJ10DJ223T	RES , CHIP	22K OHM	1	EA
R913	CRJ10DJ101T	RES , CHIP	100 OHM	1	EA
R914	CRJ10DJ473T	RES , CHIP	47K OHM	1	EA
R915	CRJ10DJ470T	RES , CHIP	47 OHM	1	EA
R916	CRJ10DJ470T	RES , CHIP	47 OHM	1	EA
R917	CRJ10DJ473T	RES , CHIP	47K OHM	1	EA
R918	CRJ10DJ103T	RES , CHIP	10K OHM	1	EA
R919	CRJ10DJ103T	RES , CHIP	10K OHM	1	EA
R920	CRJ10DJ473T	RES , CHIP	47K OHM	1	EA
R921	CRJ10DJ102T	RES , CHIP	1K OHM	1	EA
R922	CRJ10DJ223T	RES , CHIP	22K OHM	1	EA
R923	CRJ10DJ101T	RES , CHIP	100 OHM	1	EA
R924	CRJ10DJ473T	RES , CHIP	47K OHM	1	EA
R925	CRJ10DJ470T	RES , CHIP	47 OHM	1	EA
R926	CRJ10DJ470T	RES , CHIP	47 OHM	1	EA
R927	CRJ10DJ473T	RES , CHIP	47K OHM	1	EA
R928	CRJ10DJ103T	RES , CHIP	10K OHM	1	EA
R929	CRJ10DJ103T	RES , CHIP	10K OHM	1	EA
R930	CRJ10DJ473T	RES , CHIP	47K OHM	1	EA
R931	CRJ10DJ0R0T	RES , CHIP	0 OHM	1	EA
R932	CRJ10DJ0R0T	RES , CHIP	0 OHM	1	EA
R933	CRJ10DJ102T	RES , CHIP	1K OHM	1	EA
R934	CRJ10DJ102T	RES , CHIP	1K OHM	1	EA
R935	CRJ10DJ102T	RES , CHIP	1K OHM	1	EA
R936	CRJ10DJ103T	RES , CHIP	10K OHM	1	EA
R937	CRJ10DJ103T	RES , CHIP	10K OHM	1	EA
R938	CRJ10DJ101T	RES , CHIP	100 OHM	1	EA
R939	CRJ10DJ101T	RES , CHIP	100 OHM	1	EA
R940	CRJ10DJ103T	RES , CHIP	10K OHM	1	EA
R941	CRJ10DJ101T	RES , CHIP	100 OHM	1	EA
R942	CRJ10DJ101T	RES , CHIP	100 OHM	1	EA
R943	CRJ10DJ473T	RES , CHIP	47K OHM	1	EA
R944	CRJ10DJ472T	RES , CHIP	4.7K OHM	1	EA
R945	CRJ10DJ473T	RES , CHIP	47K OHM	1	EA
R947	CRJ10DJ473T	RES , CHIP	47K OHM	1	EA
R948	CRJ10DJ473T	RES , CHIP	47K OHM	1	EA
R949	CRJ10DJ101T	RES , CHIP	100 OHM	1	EA
R950	CRJ10DJ101T	RES , CHIP	100 OHM	1	EA
R951	CRJ10DJ102T	RES , CHIP	1K OHM	1	EA
R952	CRJ10DJ105T	RES , CHIP	1M OHM	1	EA
R953	CRJ10DJ0R0T	RES , CHIP	0 OHM	1	EA
R954	CRJ10DJ103T	RES , CHIP	10K OHM	1	EA
R955	CRJ10DJ220T	RES , CHIP	22 OHM	1	EA
R956	CRJ10DJ101T	RES , CHIP	100 OHM	1	EA

Ref. Designator	Part Number	Description		Qty	
HDMI PCB		**(CUP12035)**			
R958	CRJ10DJ472T	RES , CHIP	4.7K OHM	1	EA
R960	CRJ10DJ101T	RES , CHIP	100 OHM	1	EA
R961	CRJ10DJ101T	RES , CHIP	100 OHM	1	EA
R962	CRJ10DJ103T	RES , CHIP	10K OHM	1	EA
R963	CRJ10DJ473T	RES , CHIP	47K OHM	1	EA
R964	CRJ10DJ101T	RES , CHIP	100 OHM	1	EA
R969	CRJ10DJ102T	RES , CHIP	1K OHM	1	EA
R970	CRJ10DJ222T	RES , CHIP	2.2K OHM	1	EA
R971	CRJ10DJ182T	RES , CHIP	1.8K OHM	1	EA
R972	CRJ10DJ103T	RES , CHIP	10K OHM	1	EA
R973	CRJ10DJ103T	RES , CHIP	10K OHM	1	EA
R974	CRJ10DJ182T	RES , CHIP	1.8K OHM	1	EA
R975	CRJ10DJ0R0T	RES , CHIP	0 OHM	1	EA
R976	CRJ10DJ101T	RES , CHIP	100 OHM	1	EA
R977	CRJ10DJ102T	RES , CHIP	1K OHM	1	EA
R980	CRJ10DJ0R0T	RES , CHIP	0 OHM	1	EA
R981	CRJ10DJ0R0T	RES , CHIP	0 OHM	1	EA
Miscellaneous					
X901	HOX27000E180S	CRYSTAL , CHIP(27MHZ,SMD)	27MHz	1	EA
X902	COX19660E330S	X-TAL, CHIP, 19.6608 MHz (33P)	19.6608MHz	1	EA
	CMY1A297	HEAT SINK	HEAT SINK	1	EA
	CWE4202150AA	WIRE ASS'Y(1P, 150MM, #24)	WIRE	1	EA
CN80	CJP03GA19ZY	WAFER , STRAIGHT(3PIN)	WAFER	1	EA
CN82	CJP05GA01ZY	WAFER(YMW025-05R)	WAFER	1	EA
CN81	CJP34HA213ZB	PIN SOCKET , FEMALE(34P, 2.0MM)	PIN SOCKET	1	EA
CN91	CJP17GA193ZY	WAFER, CARD CABLE (SMD)	WAFER	1	EA
JK91	HJJ9H003Z	JACK , HDMI(JALCO)	YKF45-7009	1	EA
JK92	HJJ9H003Z	JACK , HDMI(JALCO)	YKF45-7009	1	EA
JK93	HJJ9H003Z	JACK , HDMI(JALCO)	YKF45-7009	1	EA
JK94	HJJ9H003Z	JACK , HDMI(JALCO)	YKF45-7009	1	EA
L801	CLZ9Z014Z	FERRITE , CHIP BEAD(60ohm, 4516)	HCB4516KF-600T60	1	EA
L802	CLZ9R005Z	FERRITE , CHIP BEAD(60ohm, 1608)	HCB1608KF-600T30	1	EA
L803	CLZ9Z014Z	FERRITE , CHIP BEAD(60ohm, 4516)	HCB4516KF-600T60	1	EA
L804	CLZ9Z014Z	FERRITE , CHIP BEAD(60ohm, 4516)	HCB4516KF-600T60	1	EA
L805	CLZ9R005Z	FERRITE , CHIP BEAD(60ohm, 1608)	HCB1608KF-600T30	1	EA
L806	CLZ9R005Z	FERRITE , CHIP BEAD(60ohm, 1608)	HCB1608KF-600T30	1	EA
L807	CLZ9Z014Z	FERRITE , CHIP BEAD(60ohm, 4516)	HCB4516KF-600T60	1	EA
L808	CLZ9Z014Z	FERRITE , CHIP BEAD(60ohm, 4516)	HCB4516KF-600T60	1	EA
L809	CLZ9R005Z	FERRITE , CHIP BEAD(60ohm, 1608)	HCB1608KF-600T30	1	EA
L810	CLZ9R005Z	FERRITE , CHIP BEAD(60ohm, 1608)	HCB1608KF-600T30	1	EA
L811	CLZ9R005Z	FERRITE , CHIP BEAD(60ohm, 1608)	HCB1608KF-600T30	1	EA
L812	CLZ9R005Z	FERRITE , CHIP BEAD(60ohm, 1608)	HCB1608KF-600T30	1	EA
L813	CLZ9R005Z	FERRITE , CHIP BEAD(60ohm, 1608)	HCB1608KF-600T30	1	EA
L814	CLZ9R005Z	FERRITE , CHIP BEAD(60ohm, 1608)	HCB1608KF-600T30	1	EA
L815	CLZ9R005Z	FERRITE , CHIP BEAD(60ohm, 1608)	HCB1608KF-600T30	1	EA
L816	CLZ9R005Z	FERRITE , CHIP BEAD(60ohm, 1608)	HCB1608KF-600T30	1	EA
L817	CLZ9Z014Z	FERRITE , CHIP BEAD(60ohm, 4516)	HCB4516KF-600T60	1	EA
L818	CLZ9Z014Z	FERRITE , CHIP BEAD(60ohm, 4516)	HCB4516KF-600T60	1	EA
L819	CLZ9R005Z	FERRITE , CHIP BEAD(60ohm, 1608)	HCB1608KF-600T30	1	EA
L820	CLZ9R005Z	FERRITE , CHIP BEAD(60ohm, 1608)	HCB1608KF-600T30	1	EA
L821	CLZ9Z014Z	FERRITE , CHIP BEAD(60ohm, 4516)	HCB4516KF-600T60	1	EA
L822	CLZ9Z014Z	FERRITE , CHIP BEAD(60ohm, 4516)	HCB4516KF-600T60	1	EA
L823	CLZ9R009Z	CHOKE COIL, CHIP (FOR HDMI)	CMM21T-900M-3H	1	EA
L824	CLZ9R009Z	CHOKE COIL, CHIP (FOR HDMI)	CMM21T-900M-3H	1	EA
L825	CLZ9R009Z	CHOKE COIL, CHIP (FOR HDMI)	CMM21T-900M-3H	1	EA
L826	CLZ9R009Z	CHOKE COIL, CHIP (FOR HDMI)	CMM21T-900M-3H	1	EA
L901	CLZ9Z014Z	FERRITE , CHIP BEAD(60ohm, 4516)	HCB4516KF-600T60	1	EA
L902	CLZ9R005Z	FERRITE , CHIP BEAD(60ohm, 1608)	HCB1608KF-600T30	1	EA
L903	CLZ9Z014Z	FERRITE , CHIP BEAD(60ohm, 4516)	HCB4516KF-600T60	1	EA
L904	CLZ9Z014Z	FERRITE , CHIP BEAD(60ohm, 4516)	HCB4516KF-600T60	1	EA
L906	CLZ9Z014Z	FERRITE , CHIP BEAD(60ohm, 4516)	HCB4516KF-600T60	1	EA
L907	CLZ9R005Z	FERRITE , CHIP BEAD(60ohm, 1608)	HCB1608KF-600T30	1	EA
L908	CLZ9R005Z	FERRITE , CHIP BEAD(60ohm, 1608)	HCB1608KF-600T30	1	EA

Ref. Designator	Part Number	Description		Qty	
HDMI PCB		**(CUP12035)**			
L909	CLZ9R005Z	FERRITE , CHIP BEAD(60ohm, 1608)	HCB1608KF-600T30	1	EA
L910	CLZ9R005Z	FERRITE , CHIP BEAD(60ohm, 1608)	HCB1608KF-600T30	1	EA
L911	CLZ9R005Z	FERRITE , CHIP BEAD(60ohm, 1608)	HCB1608KF-600T30	1	EA
L912	CLZ9R005Z	FERRITE , CHIP BEAD(60ohm, 1608)	HCB1608KF-600T30	1	EA
L913	CLZ9R005Z	FERRITE , CHIP BEAD(60ohm, 1608)	HCB1608KF-600T30	1	EA
L914	CLZ9Z014Z	FERRITE , CHIP BEAD(60ohm, 4516)	HCB4516KF-600T60	1	EA
L915	CLZ9Z014Z	FERRITE , CHIP BEAD(60ohm, 4516)	HCB4516KF-600T60	1	EA
L916	CLZ9Z014Z	FERRITE , CHIP BEAD(60ohm, 4516)	HCB4516KF-600T60	1	EA
L917	CLZ9Z014Z	FERRITE , CHIP BEAD(60ohm, 4516)	HCB4516KF-600T60	1	EA
	CHG1A306	CUSHION	CUSHION	0.5	EA
PCB , REGULATOR		**CUP12055**			
Capacitors					
C201	CCEA1EH101T	CAP , ELECT	100UF 25V	1	EA
C204	CCEA1CH101T	CAP , ELECT	100UF 16V	1	EA
C206	CCBS1H223ZFT	CAP , CERAMIC	0.022UF 50V	1	EA
C211	CCEA1CH101T	CAP , ELECT	100UF 16V	1	EA
C212	CCBS1H104ZFT	CAP , CERAMIC	0.1UF 50V Z	1	EA
C213	CCEA1CH101T	CAP , ELECT	100UF 16V	1	EA
C301	CCEA1EH101T	CAP , ELECT	100UF 25V	1	EA
C302	CCEA1EH101T	CAP , ELECT	100UF 25V	1	EA
C303	CCEA1CH101T	CAP , ELECT	100UF 16V	1	EA
C304	CCEA1CH101T	CAP , ELECT	100UF 16V	1	EA
C311	CCBS1H223ZFT	CAP , CERAMIC	0.022UF 50V	1	EA
C312	CCBS1H223ZFT	CAP , CERAMIC	0.022UF 50V	1	EA
C901	CCBS1H223ZFT	CAP , CERAMIC	0.022UF 50V	1	EA
C902	CCBS1H223ZFT	CAP , CERAMIC	0.022UF 50V	1	EA
C903	CCBS1H223ZFT	CAP , CERAMIC	0.022UF 50V	1	EA
C905	CCEA1CH101T	CAP , ELECT	100UF 16V	1	EA
C906	CCEA1CH101T	CAP , ELECT	100UF 16V	1	EA
C907	CCEA1CH101T	CAP , ELECT	100UF 16V	1	EA
C912	CCEA1EH471E	CAP , ELECT	470UF/25V	1	EA
Semiconductors					
D901	HVD1N5819T	DIODE , SCHOTTKY	1N5819	1	EA
D956	HVD2A04H	DIODE , RECT(2A)	2A04H	1	EA
IC21	CVIKIA278R00PI	I.C , REGULATOR(TO-220IS-4)	KEC(KIA278R00PI)	1	EA
IC23	HVIKIA378R05PI	I.C, REGULATOR(5V OUPUT LOW DROP)	KEC(KIA378R05PI)	1	EA
IC31	CVIKIA278R00PI	I.C , REGULATOR(TO-220IS-4)	KEC(KIA278R00PI)	1	EA
IC32	CVIKIA378R09PI	I.C , REGULATOR(+9V, 3A, TO-220IS-4)	KEC(KIA378R09PI)	1	EA
IC92	HVIKIA7805API	I.C, REGULATOR, +5V	KEC(KIA7805API)	1	EA
IC93	CVIKIA7905PI	I.C , REGULATOR(-5V)	KEC(KIA7905PI)	1	EA
IC94	HVIKIA7809API	I.C , REGULATOR +9V	KEC(KIA7809API)	1	EA
Resistors					
R201	CRD20TJ153T	RES , CARBON	15K OHM 1/5W J	1	EA
R203	CRD20TJ104T	RES , CARBON	100K OHM 1/5W J	1	EA
R211	CRD20TF4700T	RES , CARBON	470 OHM 1%	1	EA
R212	CRD20TF2000T	RES , CARBON	200 OHM 1%	1	EA
R301	CRD20TJ332T	RES , CARBON	3.3K OHM 1/5W J	1	EA
R302	CRD20TJ104T	RES , CARBON	100K OHM 1/5W J	1	EA
R303	CRD20TJ561T	RES , CARBON	560 OHM 1/5W J	1	EA
Miscellaneous					
BN31	CWB1C905100EN	WIRE ASS'Y	WIRE	1	EA
BN43	CWB1C905150BM	WIRE ASS'Y	WIRE	1	EA
BN82	CWB1C905120BM	WIRE ASS'Y	WIRE	1	EA
CN21	CJP05GA19ZY	WAFER , STRAIGHT	WAFER	1	EA
CN31	CJP05GA19ZY	WAFER , STRAIGHT	WAFER	1	EA
CN97	CJP07GA19ZY	WAFER , STRAIGHT(7PIN)	WAFER	1	EA

Ref. Designator	Part Number	Description		Qty	
PCB , REGULATOR		**CUP12055**			
CN99	CJP02GA01ZY	WAFER , STRAIGHT, 2PIN	WAFER	1	EA
AVR 254 TUNER MODULE		**CNVM9001MS0J73L**			

Data Sheet

Silicon Image™
VastLane

Sil 9185
Three Input, Single Output Deep Color HDMI Switch

Sil 9185 Pin Mapping

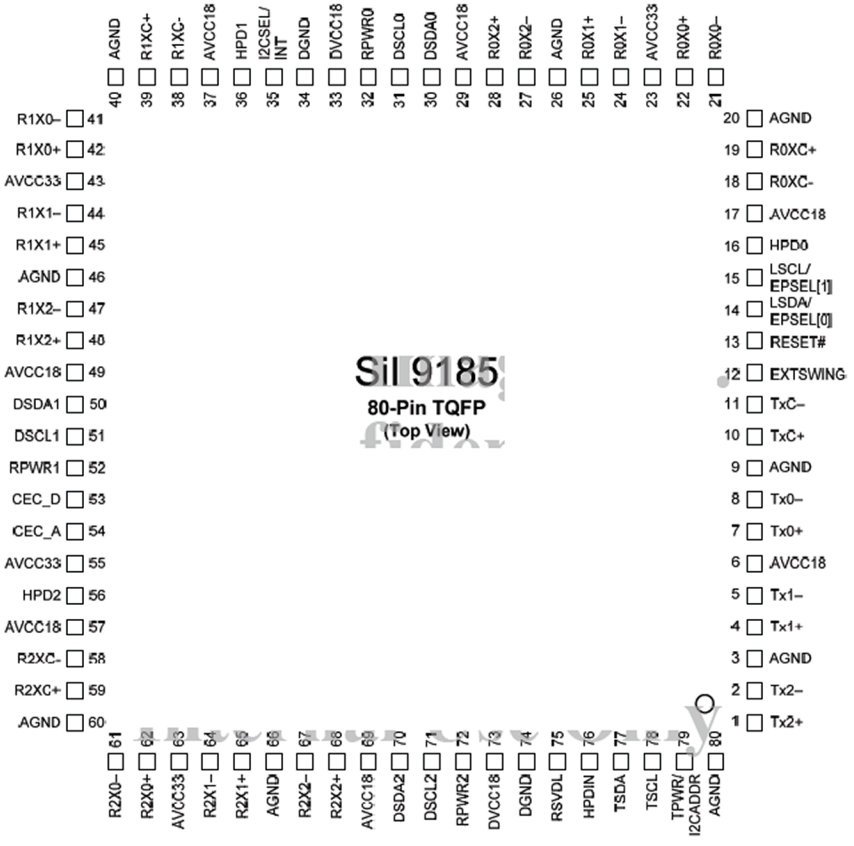

Block Level Functionality

The Sil 9185 Three Input, Single Output Deep Color HDMI Switch is used to select a single set of HDMI/DVI signals from one of three HDMI/DVI receiver-ports, and to generate a fully compliant HDMI/DVI stream as an output. It also provides DDC/HDCP, HPD, and +5V switching to allow full compliance to the HDMI/DVI Specification.

The combination of programmable equalizer and state-of-the-art DPLL can overcome signal distortion due to the long lengths of HDMI/DVI cables. Sil 9185-based switches can be cascaded many times to regenerate TMDS and HDCP signals.

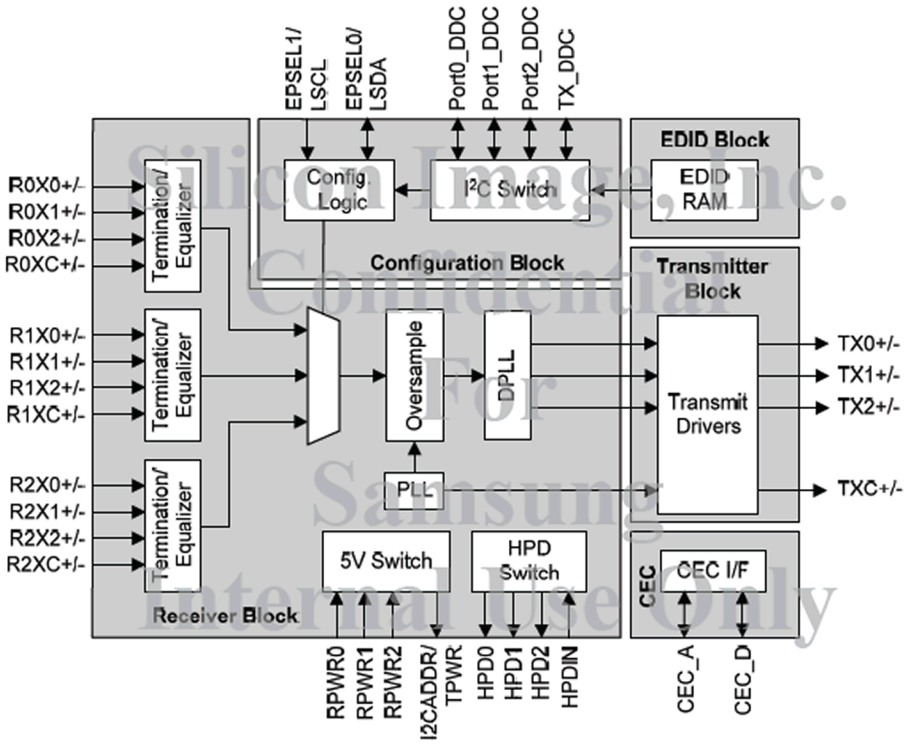

Silicon Image, Inc. Confidential For Samsung Internal Use Only

Figure 3. Functional Block Diagram

As shown in Figure 3, the Sil 9185 consists of five major blocks:

- Receiver block
- Transmitter block
- CEC Interface block
- EDID RAM block
- Configuration Block

Data Sheet

SiI 9135 HDMI Receiver with Enhanced Audio and Deep Color Outputs

Pin Diagram

Figure 1 shows the pin connections for the SiI 9135 in the 144-pin TQFP package.

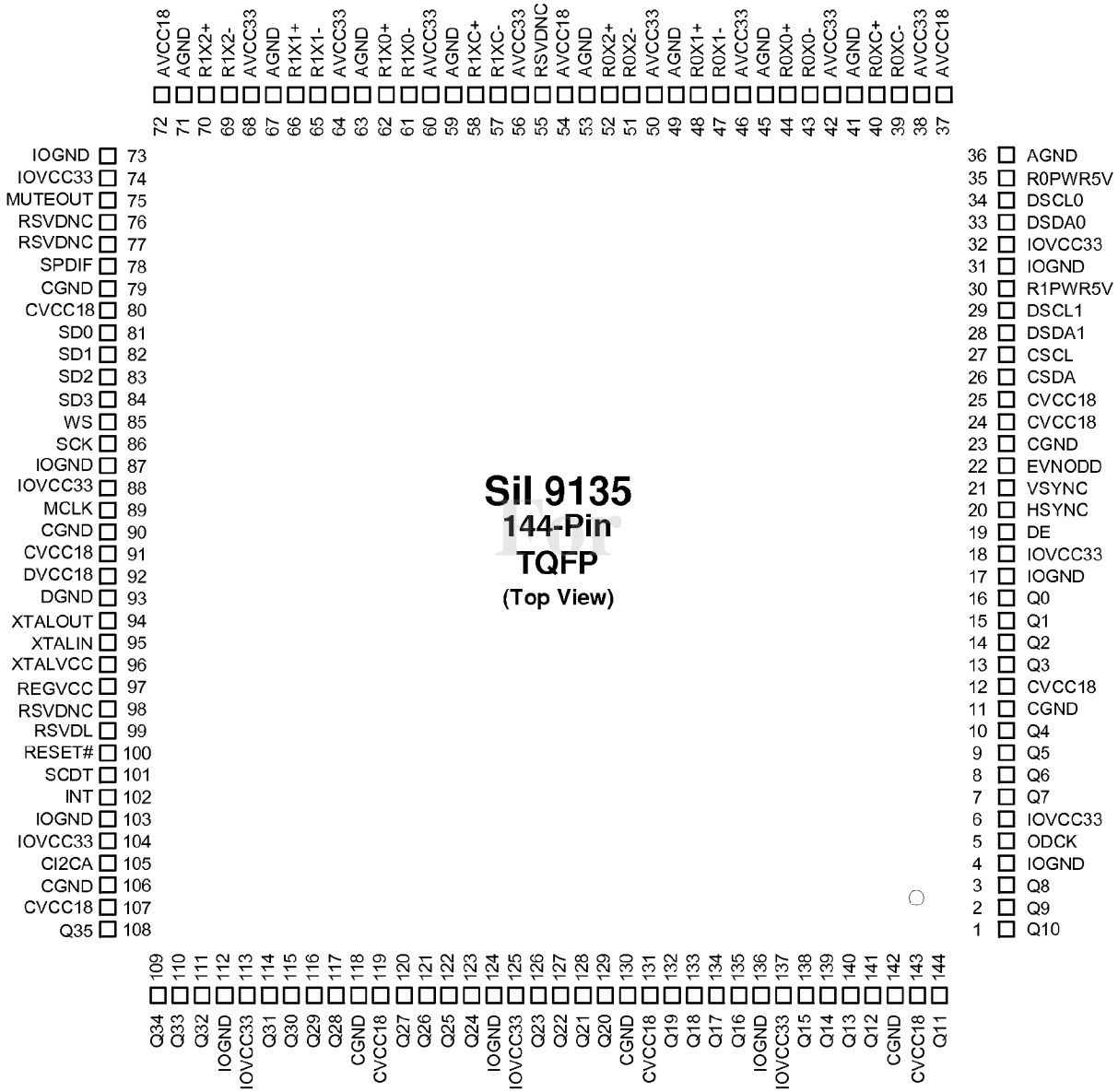

Functional Description

The Sil 9135 provides a complete solution for receiving HDMI-compliant digital audio and video. Specialized audio and video processing is available within the HDMI Receiver to add HDMI capability to consumer electronics such as AV Receivers. Figure 3 shows the functional blocks of the chip.

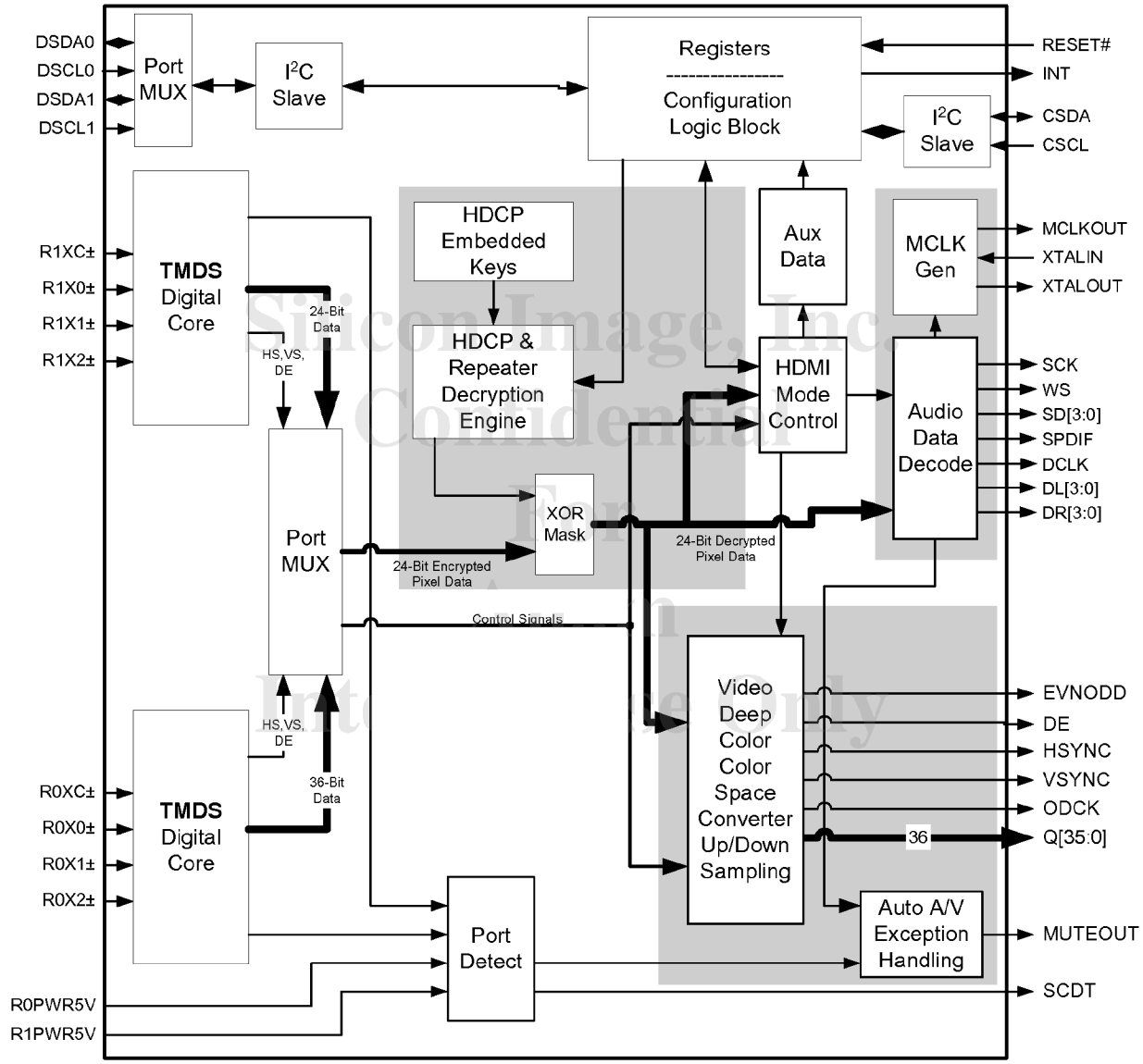

Figure 3. Functional Block Diagram

The Sil 9135 supports two HDMI input ports. Only one port can be active at any time.

Data Sheet

Silicon Image™

Sil 9134 HDMI Transmitter with Enhanced Audio and 10/12 Bit Deep Color Video Support

Data Sheet

Sil 9134 Pin Diagram

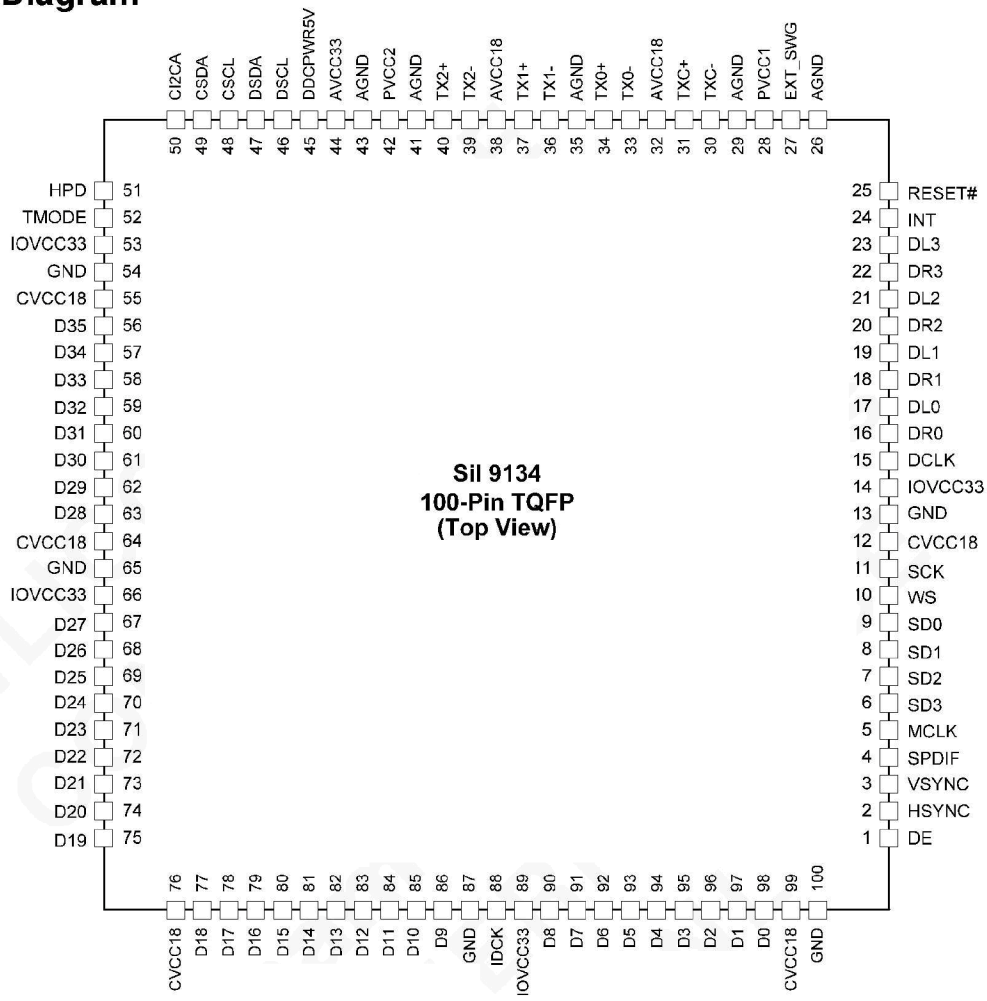

Figure 1. 100-Pin TQFP Pinout Diagram

Functional Description

The Sil 9134 provides a complete solution for transmitting HDMI compliant digital audio/video. Specialized audio/video processing available within the Sil 9134 easily and cost effectively adds HDMI capability to consumer electronics devices. Figure 2 shows the functional blocks of the device. Pin descriptions begin on page 35.

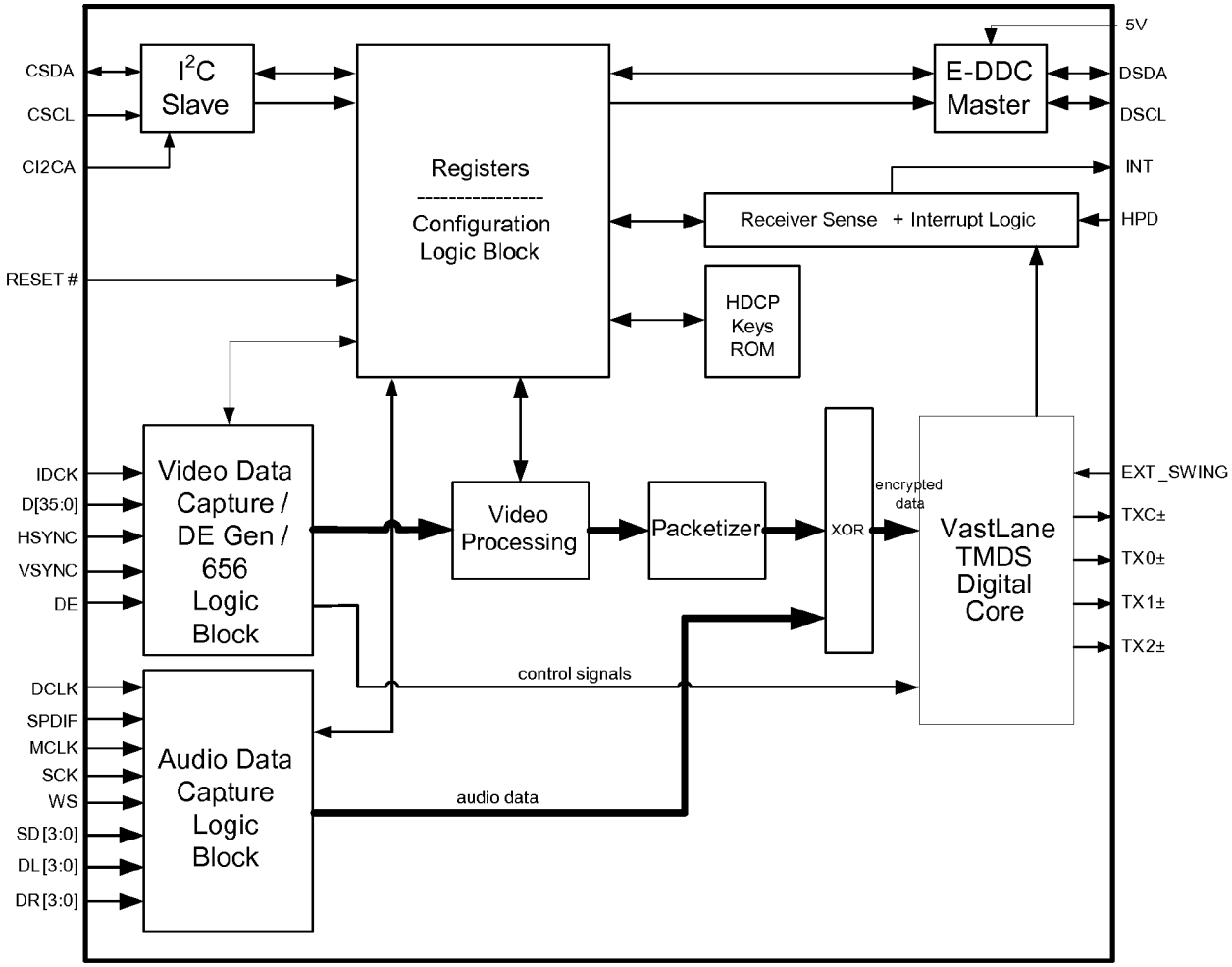

Figure 2. Functional Block Diagram

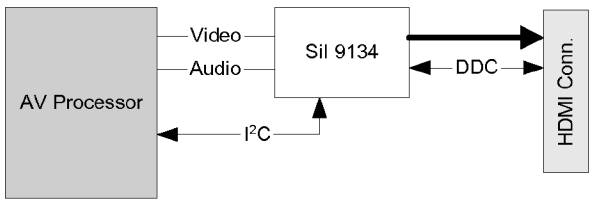

ES29LV320E

32Mbit(4M x 8/2M x 16)
CMOS 3.0 Volt-only, Boot Sector Flash Memory

GENERAL FEATURES

- **Single power supply operation**
  - 2.7V ~ 3.6V for read, program and erase operations
- **Sector Structure**
  - 8Kbyte x 8 boot sectors
  - 64Kbyte x 63 sectors
  - 256byte security sector
- **Top or Bottom boot block**
  - ES29LV320ET for Top boot block device
  - ES29LV320EB for Bottom boot block device
- **A 256 bytes of extra sector for security code**
  - Factory locked
  - Customer lockable
- **Package Options**
  - 48-pin TSOP
  - 48-ball FBGA
  - Pb-free packages
  - All Pb-free products are RoHS-Compliant
- **Low Vcc write inhibit**
- **Manufactured on 0.18um process technology**
- **Compatible with JEDEC standards**
  - Pinout and software compatible with single-power supply flash standard

DEVICE PERFORMANCE

- **Read access time**
  - 70ns/90ns for normal Vcc range (2.7V ~ 3.6V)
- **Program and erase time**
  - Program time : 6us/byte, 8us/word (typical)
  - Accelerated program time : 4us/word (typical)
  - Sector erase time : 0.7sec/sector (typical)
- **Power consumption (typical values)**
  - 15uA in standby or automatic sleep mode
  - 10mA active read current at 5MHz
  - 15mA active write current during program or erase
- **Minimum 100,000 program/erase cycles per sector**
- **20 Year data retention at 125°C**

SOFTWARE FEATURES

- **Erase Suspend / Erase Resume**
- **Data# poll and toggle for Program/erase status**
- **CFI (Common Flash Interface) supported**
- **Unlock Bypass Program**
- **Autoselect mode**
- **Auto-sleep mode after t_{ACC} + 30ns**

HARDWARE FEATURES

- **Hardware reset input pin (RESET#)**
  - Provides a hardware reset to device
  - Any internal device operation is terminated and the device returns to read mode by the reset
- **Ready/Busy# output pin (RY/BY#)**
  - Provides a program or erase operational status about whether it is finished for read or still being progressed
- **WP#/ACC input pin**
  - Two outermost boot sectors are protected when WP# is set to low, regardless of sector protection
  - Program speed is accelerated by raising WP#/ACC to a high voltage (11.5V~12.5V)
- **Sector protection / unprotection (RESET# , A9)**
  - Hardware method of locking a sector to prevent any program or erase operation within that sector
  - Two methods are provided :
    - In-system method by RESET# pin
    - A9 high-voltage method for PROM programmers
- **Temporary Sector Unprotection (RESET#)**
  - Allows temporary unprotection of previously protected sectors to change data in-system

GENERAL PRODUCT DESCRIPTION

The ES29LV320 is a 32 megabit, 3.0 volt-only flash memory device, organized as 4M x 8 bits (Byte mode) or 2M x 16 bits (Word mode) which is configurable by BYTE#. Eight boot sectors and sixty three main sectors with uniform size are provided : 8Kbytes x 8 and 64Kbytes x 63. The device is manufactured with ESI's proprietary, high performance and highly reliable 0.18um CMOS flash technology. The device can be programmed or erased in-system with standard 3.0 Volt Vcc supply (2.7V~3.6V) and can also be programmed in standard EPROM programmers. The device offers minimum endurance of 100,000 program/erase cycles and more than 10 years of data retention.

The ES29LV320 offers access time as fast as 70ns or 90ns, allowing operation of high-speed microprocessors without wait states. Three separate control pins are provided to eliminate bus contention : chip enable (CE#), write enable (WE#) and output enable (OE#).

All program and erase operation are automatically and internally performed and controlled by embedded program/erase algorithms built in the device. The device automatically generates and times the necessary high-voltage pulses to be applied to the cells, performs the verification, and counts the number of sequences. Some status bits (DQ7, DQ6 and DQ5) read by data# polling or toggling between consecutive read cycles provide to the users the internal status of program/erase operation: whether it is successfully done or still being progressed.

Extra Security Sector of 256 bytes

In the device, an extra security sector of 256 bytes is provided to customers. This extra sector can be used for various purposes such as storing ESN (Electronic Serial Number) or customer's security codes. Once after the extra sector is written, it can be permanently locked by the device manufacturer (**factory-locked**) or a customer(**customer-lockble**). At the same time, a **lock indicator bit** (**DQ7**) is permanently set to a 1 if the part is factory- locked, or set to 0 if it is customer-lockable. Therefore, this lock indicator bit (DQ7) can be properly used to avoid that any customer-lockable part is used to replace a factory-locked part. The extra security sector is an extra memory space for customers when it is used as a customer-lockable version. So, it can be read and written like any other sectors. But it should be noted that the number of E/W(Erase and Write) cycles is limited to 300 times (maximum) only in the Security Sector.

Special services such as ESN and factory-lock are available to customers (ESI's **Special-Code service**) The ES29LV320 is completely compatible with the JEDEC standard command set of single power supply Flash. Commands are written to the internal command register using standard write timings of microprocessor and data can be read out from the cell array in the device with the same way as used in other EPROM or flash devices.

PRODUCT SELECTOR GUIDE

Family Part Number	ES29LV320E	
Voltage Range	2.7V ~ 3.6 V	
Speed Option	**70**	**90**
Max Access Time (ns)	70	90
CE# Access (ns)	70	90
OE# Access (ns)	30	40

FUNCTION BLOCK DIAGRAM

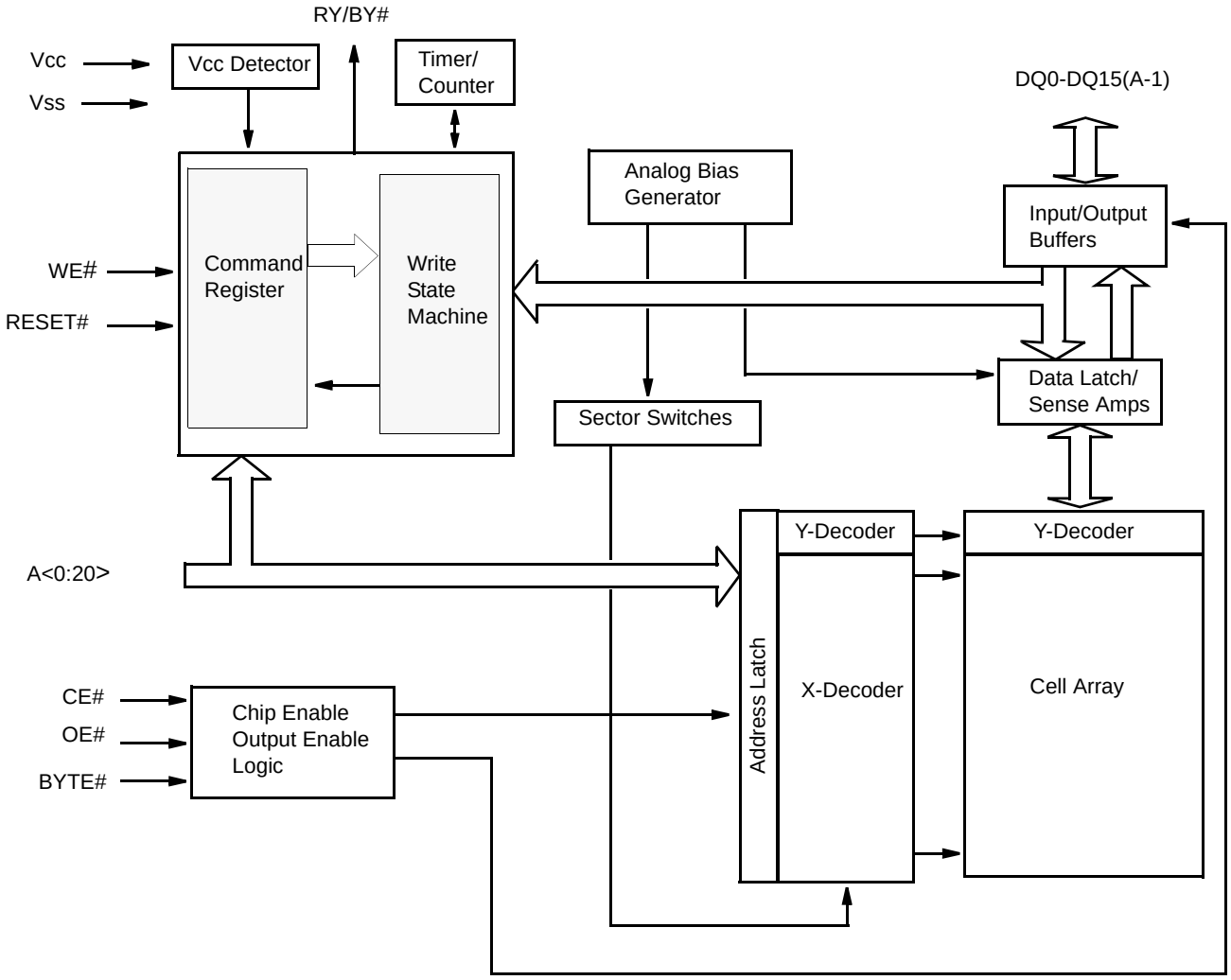

PIN DESCRIPTION

Pin	Description
A0-A20	21 Addresses
DQ0-DQ14	15 Data Inputs/Outputs
DQ15/A-1	DQ15 (Data Input/Output, Word Mode) A-1 (LSB Address Input, Byte Mode)
CE#	Chip Enable
OE#	Output Enable
WE#	Write Enable
WP#/ACC	Hardware Write Protect/Acceleration Pin
RESET#	Hardware Reset Pin, Active Low
BYTE#	Selects 8-bit or 16-bit mode
RY/BY#	Ready/Busy Output
Vcc	3.0 volt-only single power supply (see Product Selector Guide for speed options and voltage supply tolerances)
Vss	Device Ground
NC	Pin Not Connected Internally

LOGIC SYMBOL

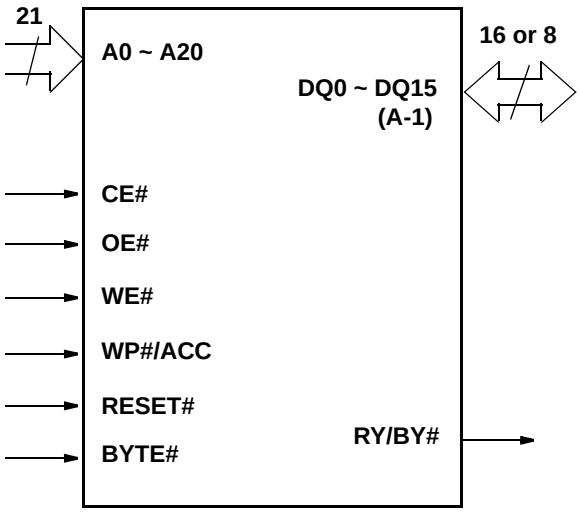

CONNECTION DIAGRAM

48-Ball FBGA 6 x 8 mm)

(Top View, Balls Facing Down)

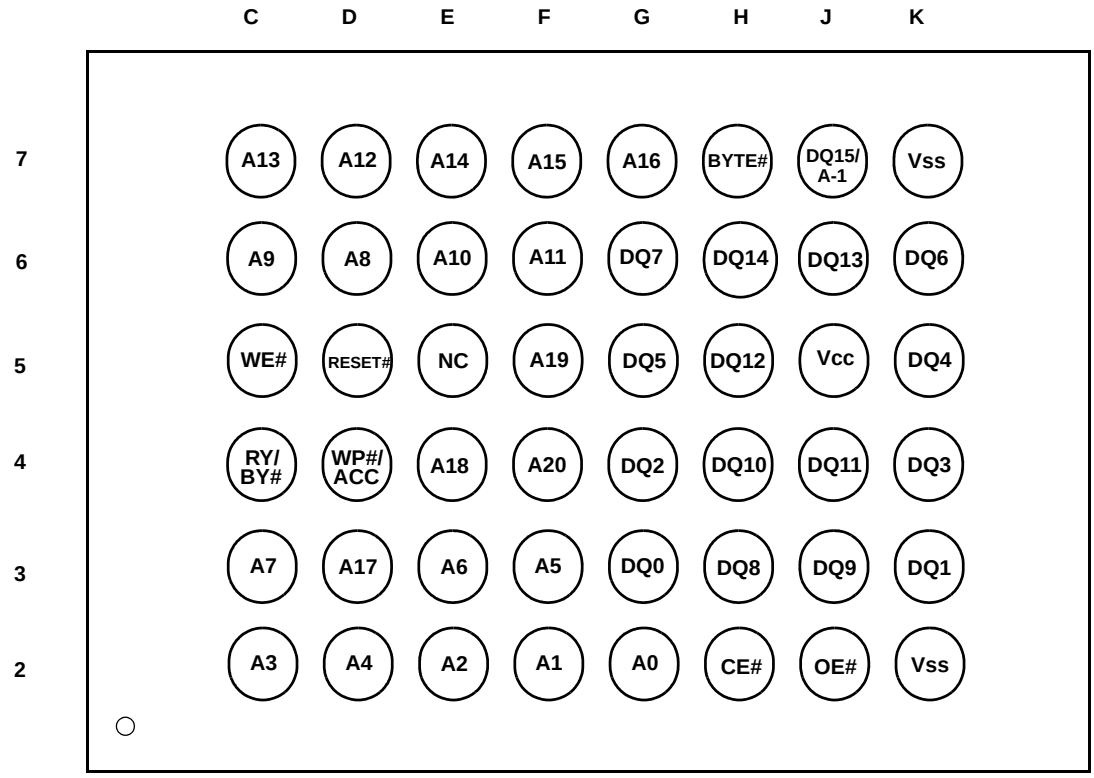

256Mb DDR SDRAM Specification

A3S56D30ETP
A3S56D40ETP

Powerchip 力晶半導體 Powerchip Semiconductor Corp.

Zentel

A3S56D30ETP
A3S56D40ETP

256M Double Data Rate Synchronous DRAM

DESCRIPTION

A3S56D30ETP is a 4-bank x 8,388,608-word x 8bit, A3S56D40ETP is a 4-bank x 4,194,304-word x 16bit double data rate synchronous DRAM , with SSTL_2 interface. All control and address signals are referenced to the rising edge of CLK. Input data is registered on both edges of data strobe ,and output data and data strobe are referenced on both edges of CLK. The A3S56D30/40ETP achieves very high speed clock rate up to 200 MHz .

FEATURES

- Vdd=Vddq=2.5V±0.2V (-5E, -5, -6)
- Double data rate architecture ; two data transfers per clock cycle.
- Bidirectional , data strobe (DQS) is transmitted/received with data
- Differential clock input (CLK and /CLK)
- DLL aligns DQ and DQS transitions with CLK transitions edges of DQS
- Commands entered on each positive CLK edge ;
- Data and data mask referenced to both edges of DQS
- 4 bank operation controlled by BA0 , BA1 (Bank Address)
- /CAS latency - 2.0 / 2.5 / 3.0 (programmable) ;
  Burst length - 2 / 4 / 8 (programmable)
  Burst type - Sequential / Interleave (programmable)
- Auto precharge / All bank precharge controlled by A10
- Support concurrent auto-precharge
- 8192 refresh cycles / 64ms (4 banks concurrent refresh)
- Auto refresh and Self refresh
- Row address A0-12 / Column address A0-9(x8) /A0-8(x16)
- SSTL_2 Interface
- Package 400-mil, 66-pin Thin Small Outline Package (TSOP II) with 0.65mm lead pitch

Zentel

A3S56D30ETP
A3S56D40ETP

256M Double Data Rate Synchronous DRAM

Pin Assignment (Top View) 66-pin TSOP

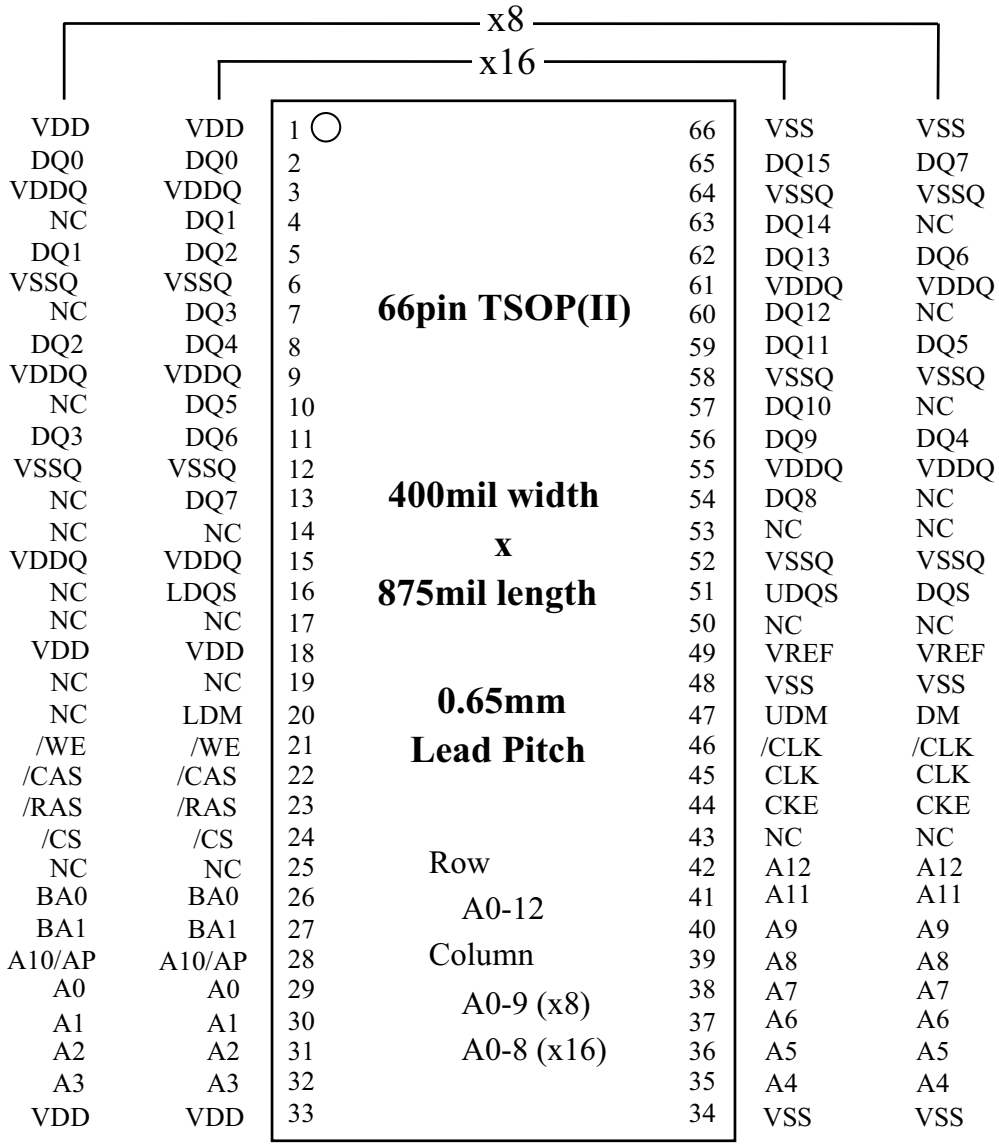

VDD	VDD	1	66	VSS	VSS
DQ0	DQ0	2	65	DQ15	DQ7
VDDQ	VDDQ	3	64	VSSQ	VSSQ
NC	DQ1	4	63	DQ14	NC
DQ1	DQ2	5	62	DQ13	DQ6
VSSQ	VSSQ	6	61	VDDQ	VDDQ
NC	DQ3	7	60	DQ12	NC
DQ2	DQ4	8	59	DQ11	DQ5
VDDQ	VDDQ	9	58	VSSQ	VSSQ
NC	DQ5	10	57	DQ10	NC
DQ3	DQ6	11	56	DQ9	DQ4
VSSQ	VSSQ	12	55	VDDQ	VDDQ
NC	DQ7	13	54	DQ8	NC
NC	NC	14	53	NC	NC
VDDQ	VDDQ	15	52	VSSQ	VSSQ
NC	LDQS	16	51	UDQS	DQS
NC	NC	17	50	NC	NC
VDD	VDD	18	49	VREF	VREF
NC	NC	19	48	VSS	VSS
NC	LDM	20	47	UDM	DM
/WE	/WE	21	46	/CLK	/CLK
/CAS	/CAS	22	45	CLK	CLK
/RAS	/RAS	23	44	CKE	CKE
/CS	/CS	24	43	NC	NC
NC	NC	25	42	A12	A12
BA0	BA0	26	41	A11	A11
BA1	BA1	27	40	A9	A9
A10/AP	A10/AP	28	39	A8	A8
A0	A0	29	38	A7	A7
A1	A1	30	37	A6	A6
A2	A2	31	36	A5	A5
A3	A3	32	35	A4	A4
VDD	VDD	33	34	VSS	VSS

CLK, /CLK	**: Master Clock**	**A0-12**	**: Address Input**
CKE	**: Clock Enable**	**BA0,1**	**: Bank Address Input**
/CS	**: Chip Select**	**Vdd**	**: Power Supply**
/RAS	**: Row Address Strobe**	**VddQ**	**: Power Supply for Output**
/CAS	**: Column Address Strobe**	**Vss**	**: Ground**
/WE	**: Write Enable**	**VssQ**	**: Ground for Output**
DQ0-15	**: Data I/O (x16)**		
DQ0-7	**: Data I/O (x8)**		
UDM, LDM	**: Write Mask (x16)**		
DM	**: Write Mask (x8)**		
UDQS, LDQS	**: Data Strobe (x16)**		
DQS	**: Data Strobe (x8)**		

PIN FUNCTION

SYMBOL	TYPE	DESCRIPTION
CLK, /CLK	Input	Clock: CLK and /CLK are differential clock inputs. All address and control input signals are sampled on the crossing of the positive edge of CLK and negative edge of /CLK. Output (read) data is referenced to the crossings of CLK and /CLK (both directions of crossing).
CKE	Input	Clock Enable: CKE controls internal clock. When CKE is low, internal clock for the following cycle is ceased. CKE is also used to select auto / self refresh. After self refresh mode is started, CKE becomes asynchronous input. Self refresh is maintained as long as CKE is low.
/CS	Input	Chip Select: When /CS is high, any command means No Operation.
/RAS, /CAS, /WE	Input	Combination of /RAS, /CAS, /WE defines basic commands.
A0-12	Input	A0-12 specify the Row / Column Address in conjunction with BA0,1. The Row Address is specified by A0-12. The Column Address is specified by A0-9(x8) and A0-8(x16). A10 is also used to indicate precharge option. When A10 is high at a read / write command, an auto precharge is performed. When A10 is high at a precharge command, all banks are precharged.
BA0,1	Input	Bank Address: BA0,1 specifies one of four banks to which a command is applied. BA0,1 must be set with ACT, PRE, READ, WRITE commands.
DQ0-7 (x8), DQ0-15 (x16),	Input / Output	Data Input/Output: Data bus
DQS (x8) UDQS, LDQS (x16)	Input / Output	Data Strobe: Output with read data, input with write data. Edge-aligned with read data, centered in write data. Used to capture write data. For the x16, LDQS corresponds to the data on DQ0-DQ7; UDQS correspond to the data on DQ8-DQ15
DM (x8) UDM, LDM (x16)	Input	Input Data Mask: DM is an input mask signal for write data. Input data is masked when DM is sampled HIGH along with that input data during a WRITE access. DM is sampled on both edges of DQS. Although DM pins are input only, the DM loading matches the DQ and DQS loading. For the x16, LDM corresponds to the data on DQ0-DQ7; UDM corresponds to the data on DQ8-DQ15.
Vdd, Vss	Power Supply	Power Supply for the memory array and peripheral circuitry.
VddQ, VssQ	Power Supply	VddQ and VssQ are supplied to the Output Buffers only.
Vref	Input	SSTL_2 reference voltage.

Zentel

A3S56D30ETP
A3S56D40ETP
256M Double Data Rate Synchronous DRAM

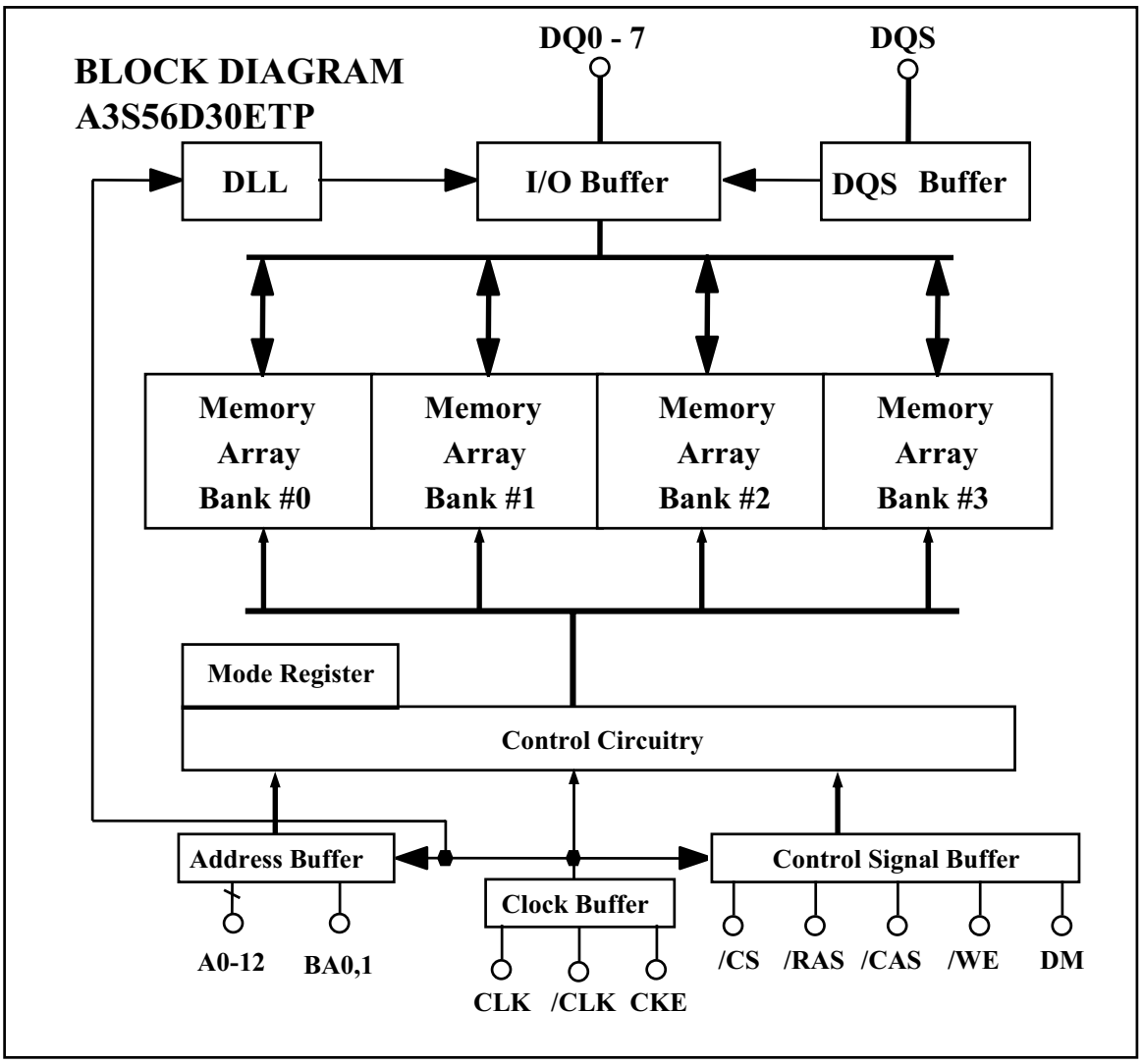

Type Designation Code

This rule is applied to only Synchronous DRAM family.

A 3 S 56 D 3 0 E TP –G5

- Speed Grade — 6: 166MHz @CL=3.0/2.5, and 133MHz @CL=2.0; 5: 200MHz @CL=3.0, 166MHz @CL=2.5, and 133MHz @CL=2.0; 5E: 200MHz @CL=3.0/2.5, and 133MHz @CL=2.0
- Package Type TP: TSOP(II)
- Process Generation
- Function Reserved for Future Use
- Organization 2^n 3: x8
- **DDR Synchronous DRAM**
- Density 56: 256M bits
- Interface S:SSTL_3, _2
- Memory Style (DRAM)
- Zentel DRAM

Zentel

A3S56D30ETP
A3S56D40ETP

256M Double Data Rate Synchronous DRAM

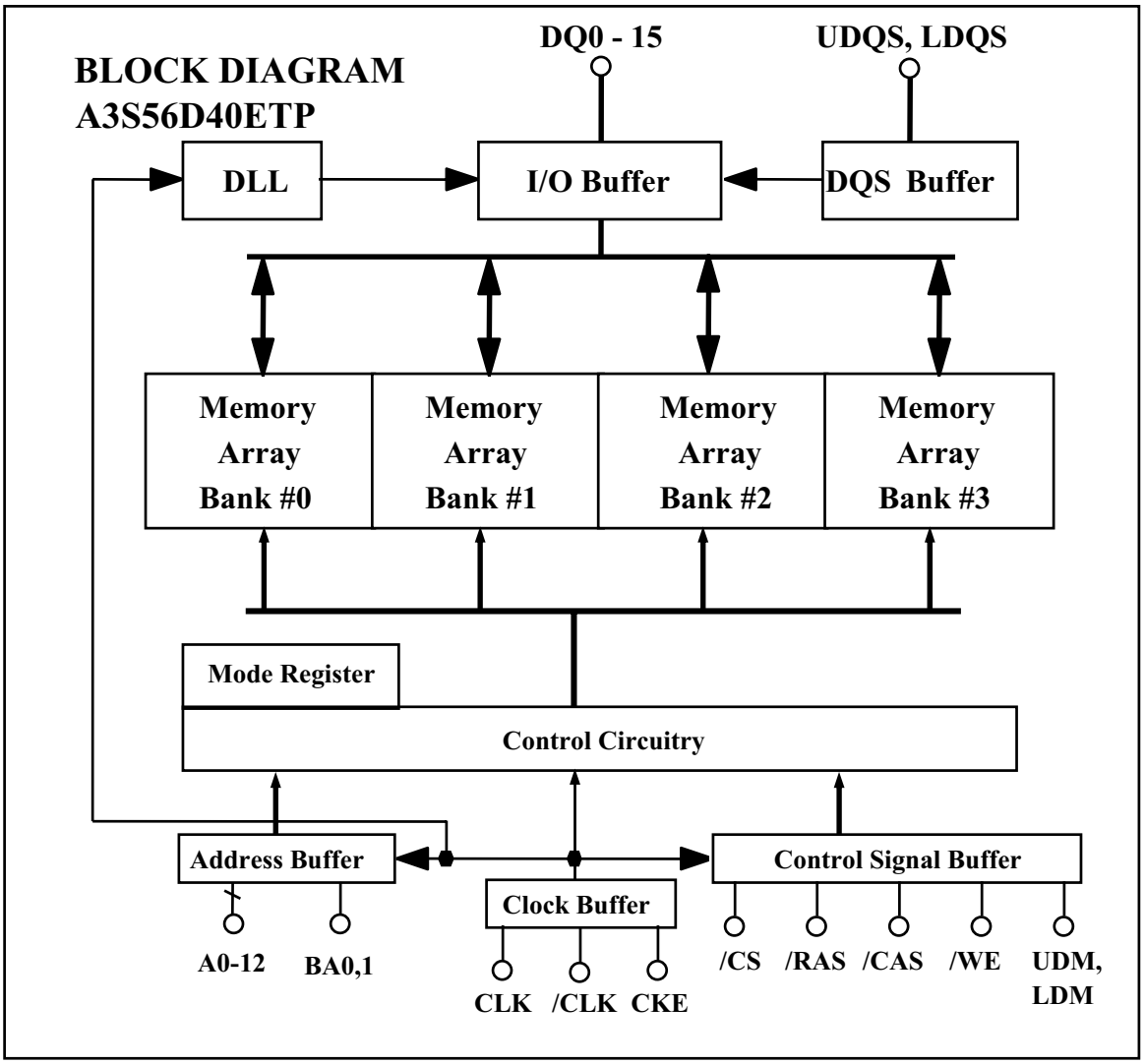

Type Designation Code

This rule is applied to only Synchronous DRAM family.

A 3 S 56 D 4 0 E TP –G5

- Speed Grade — 6: 166MHz @CL=3.0/2.5, and 133MHz @CL=2.0; 5: 200MHz @CL=3.0, 166MHz @CL=2.5, and 133MHz @CL=2.0; 5E: 200MHz @CL=3.0/2.5, and 133MHz @CL=2.0
- Package Type TP: TSOP(II)
- Process Generation
- Function Reserved for Future Use
- Organization 2^n 4: x16
- **DDR Synchronous DRAM**
- Density 56: 256M bits
- Interface S:SSTL_3, _2
- Memory Style (DRAM)
- Zentel DRAM

BASIC FUNCTIONS

The A3S56D30/40ETP provides basic functions, bank (row) activate, burst read / write, bank (row) precharge, and auto / self refresh. Each command is defined by control signals of /RAS, /CAS and /WE at CLK rising edge. In addition to 3 signals, /CS , CKE and A10 are used as chip select, refresh option, and precharge option, respectively. To know the detailed definition of commands, please see the command truth table.

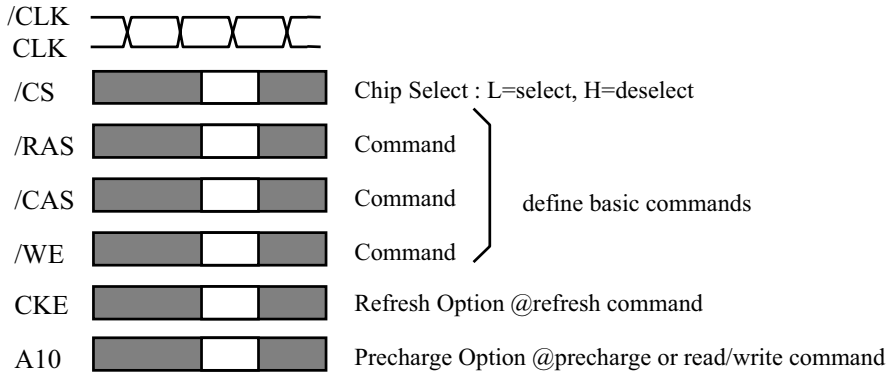

Activate (ACT) [/RAS =L, /CAS =/WE =H]

ACT command activates a row in an idle bank indicated by BA.

Read (READ) [/RAS =H, /CAS =L, /WE =H]

READ command starts burst read from the active bank indicated by BA. First output data appears after /CAS latency. When A10 =H at this command, the bank is deactivated after the burst read (auto-precharge, **READA**)

Write (WRITE) [/RAS =H, /CAS =/WE =L]

WRITE command starts burst write to the active bank indicated by BA. Total data length to be written is set by burst length. When A10 =H at this command, the bank is deactivated after the burst write (auto-precharge, **WRITEA**)

Precharge (PRE) [/RAS =L, /CAS =H, /WE =L]

PRE command deactivates the active bank indicated by BA. This command also terminates burst read /write operation. When A10 =H at this command, all banks are deactivated (precharge all, **PREA**).

Auto-Refresh (REFA) [/RAS =/CAS =L, /WE =CKE =H]

REFA command starts auto-refresh cycle. Refresh address including bank address are generated internally. After this command, the banks are precharged automatically.

COMMAND TRUTH TABLE

COMMAND	MNEMONIC	CKE n-1	CKE n	/CS	/RAS	/CAS	/WE	BA0,1	A10 /AP	A0-9, 11-12	note
Deselect	DESEL	H	X	H	X	X	X	X	X	X	
No Operation	NOP	H	X	L	H	H	H	X	X	X	
Row Address Entry & Bank Activate	ACT	H	H	L	L	H	H	V	V	V	
Single Bank Precharge	PRE	H	H	L	L	H	L	V	L	X	
Precharge All Banks	PREA	H	H	L	L	H	L	X	H	X	
Column Address Entry & Write	WRITE	H	H	L	H	L	L	V	L	V	
Column Address Entry & Write with Auto-Precharge	WRITEA	H	H	L	H	L	L	V	H	V	
Column Address Entry & Read	READ	H	H	L	H	L	H	V	L	V	
Column Address Entry & Read with Auto-Precharge	READA	H	H	L	H	L	H	V	H	V	
Auto-Refresh	REFA	H	H	L	L	L	H	X	X	X	
Self-Refresh Entry	REFS	H	L	L	L	L	H	X	X	X	
Self-Refresh Exit	REFSX	L	H	H	X	X	X	X	X	X	
		L	H	L	H	H	H	X	X	X	
Burst Terminate	TERM	H	H	L	H	H	L	X	X	X	1
Mode Register Set	MRS	H	H	L	L	L	L	L	L	V	2

H=High Level, L=Low Level, V=Valid, X=Don't Care, n=CLK cycle number

NOTE:

1. Applies only to read bursts with autoprecharge disabled; this command is undefined (and should not be used) for read bursts with autoprecharge enabled, and for write bursts.
2. BA0-BA1 select either the Base or the Extended Mode Register (BA0 = 0, BA1 = 0 selects Mode Register;BA0=1 , BA1 = 0 selects Extended Mode Register; other combinations of BA0-BA1 are reserved; A0-A12 provide the op-code to be written to the selected Mode Register.

FUNCTION TRUTH TABLE

Current State	/CS	/RAS	/CAS	/WE	Address	Command	Action	Notes
IDLE	H	X	X	X	X	DESEL	NOP	
	L	H	H	H	X	NOP	NOP	
	L	H	H	L	BA	TERM	ILLEGAL	2
	L	H	L	X	BA, CA, A10	READ / WRITE	ILLEGAL	2
	L	L	H	H	BA, RA	ACT	Bank Active, Latch RA	
	L	L	H	L	BA, A10	PRE / PREA	NOP	4
	L	L	L	H	X	REFA	Auto-Refresh	5
	L	L	L	L	Op-Code, Mode-Add	MRS	Mode Register Set	5
ROW ACTIVE	H	X	X	X	X	DESEL	NOP	
	L	H	H	H	X	NOP	NOP	
	L	H	H	L	BA	TERM	ILLEGAL	
	L	H	L	H	BA, CA, A10	READ / READA	Begin Read, Latch CA, Determine Auto-Precharge	
	L	H	L	L	BA, CA, A10	WRITE / WRITEA	Begin Write, Latch CA, Determine Auto-Precharge	
	L	L	H	H	BA, RA	ACT	Bank Active / ILLEGAL	2
	L	L	H	L	BA, A10	PRE / PREA	Precharge / Precharge All	
	L	L	L	H	X	REFA	ILLEGAL	
	L	L	L	L	Op-Code, Mode-Add	MRS	ILLEGAL	
READ(Auto-Precharge Disabled)	H	X	X	X	X	DESEL	NOP (Continue Burst to END)	
	L	H	H	H	X	NOP	NOP (Continue Burst to END)	
	L	H	H	L	BA	TERM	Terminate Burst	
	L	H	L	H	BA, CA, A10	READ / READA	Terminate Burst, Latch CA, Begin New Read, Determine Auto-Precharge	3
	L	H	L	L	BA, CA, A10	WRITE / WRITEA	ILLEGAL	
	L	L	H	H	BA, RA	ACT	Bank Active / ILLEGAL	2
	L	L	H	L	BA, A10	PRE / PREA	Terminate Burst, Precharge	
	L	L	L	H	X	REFA	ILLEGAL	
	L	L	L	L	Op-Code, Mode-Add	MRS	ILLEGAL	

FUNCTION TRUTH TABLE (continued)

Current State	/CS	/RAS	/CAS	/WE	Address	Command	Action	Notes
WRITE(Auto-Precharge Disabled)	H	X	X	X	X	DESEL	NOP (Continue Burst to END)	
	L	H	H	H	X	NOP	NOP (Continue Burst to END)	
	L	H	H	L	BA	TERM	ILLEGAL	
	L	H	L	H	BA, CA, A10	READ / READA	Terminate Burst, Latch CA, Begin Read, Determine Auto-Precharge	3
	L	H	L	L	BA, CA, A10	WRITE / WRITEA	Terminate Burst, Latch CA, Begin Write, Determine Auto-Precharge	3
	L	L	H	H	BA, RA	ACT	Bank Active / ILLEGAL	2
	L	L	H	L	BA, A10	PRE / PREA	Terminate Burst, Precharge	
	L	L	L	H	X	REFA	ILLEGAL	
	L	L	L	L	Op-Code, Mode-Add	MRS	ILLEGAL	
READ with Auto-Precharge	H	X	X	X	X	DESEL	NOP (Continue Burst to END)	
	L	H	H	H	X	NOP	NOP (Continue Burst to END)	
	L	H	H	L	BA	TERM	ILLEGAL	
	L	H	L	H	BA, CA, A10	READ / READA	Support Concurrent Auto-Precharge	
	L	H	L	L	BA, CA, A10	WRITE / WRITEA	Support Concurrent Auto-Precharge	
	L	L	H	H	BA, RA	ACT	Bank Active / ILLEGAL	2
	L	L	H	L	BA, A10	PRE / PREA	Precharge / ILLEGAL	2
	L	L	L	H	X	REFA	ILLEGAL	
	L	L	L	L	Op-Code, Mode-Add	MRS	ILLEGAL	
WRITE with Auto-Precharge	H	X	X	X	X	DESEL	NOP (Continue Burst to END)	
	L	H	H	H	X	NOP	NOP (Continue Burst to END)	
	L	H	H	L	BA	TERM	ILLEGAL	
	L	H	L	H	BA, CA, A10	READ / READA	Support Concurrent Auto-Precharge	
	L	H	L	L	BA, CA, A10	WRITE / WRITEA	Support Concurrent Auto-Precharge	
	L	L	H	H	BA, RA	ACT	Bank Active / ILLEGAL	2
	L	L	H	L	BA, A10	PRE / PREA	Precharge / ILLEGAL	2
	L	L	L	H	X	REFA	ILLEGAL	
	L	L	L	L	Op-Code, Mode-Add	MRS	ILLEGAL	

FUNCTION TRUTH TABLE (continued)

Current State	/CS	/RAS	/CAS	/WE	Address	Command	Action	Notes
PRE-CHARGING	H	X	X	X	X	DESEL	NOP (Idle after tRP)	
	L	H	H	H	X	NOP	NOP (Idle after tRP)	
	L	H	H	L	BA	TERM	ILLEGAL	2
	L	H	L	X	BA, CA, A10	READ / WRITE	ILLEGAL	2
	L	L	H	H	BA, RA	ACT	ILLEGAL	2
	L	L	H	L	BA, A10	PRE / PREA	NOP (Idle after tRP)	4
	L	L	L	H	X	REFA	ILLEGAL	
	L	L	L	L	Op-Code, Mode-Add	MRS	ILLEGAL	
ROW ACTIVATING	H	X	X	X	X	DESEL	NOP (Row Active after tRCD)	
	L	H	H	H	X	NOP	NOP (Row Active after tRCD)	
	L	H	H	L	BA	TERM	ILLEGAL	2
	L	H	L	X	BA, CA, A10	READ / WRITE	ILLEGAL	2
	L	L	H	H	BA, RA	ACT	ILLEGAL	2
	L	L	H	L	BA, A10	PRE / PREA	ILLEGAL	2
	L	L	L	H	X	REFA	ILLEGAL	
	L	L	L	L	Op-Code, Mode-Add	MRS	ILLEGAL	
WRITE RE-COVERING	H	X	X	X	X	DESEL	NOP	
	L	H	H	H	X	NOP	NOP	
	L	H	H	L	BA	TERM	ILLEGAL	2
	L	H	L	X	BA, CA, A10	READ / WRITE	ILLEGAL	2
	L	L	H	H	BA, RA	ACT	ILLEGAL	2
	L	L	H	L	BA, A10	PRE / PREA	ILLEGAL	2
	L	L	L	H	X	REFA	ILLEGAL	
	L	L	L	L	Op-Code, Mode-Add	MRS	ILLEGAL	

FUNCTION TRUTH TABLE (continued)

Current State	/CS	/RAS	/CAS	/WE	Address	Command	Action	Notes
REFRESHING	H	X	X	X	X	DESEL	NOP (Idle after tRC)	
	L	H	H	H	X	NOP	NOP (Idle after tRC)	
	L	H	H	L	BA	TERM	ILLEGAL	
	L	H	L	X	BA, CA, A10	READ / WRITE	ILLEGAL	
	L	L	H	H	BA, RA	ACT	ILLEGAL	
	L	L	H	L	BA, A10	PRE / PREA	ILLEGAL	
	L	L	L	H	X	REFA	ILLEGAL	
	L	L	L	L	Op-Code, Mode-Add	MRS	ILLEGAL	
MODE REGISTER SETTING	H	X	X	X	X	DESEL	NOP (Row Active after tRSC)	
	L	H	H	H	X	NOP	NOP (Row Active after tRSC)	
	L	H	H	L	BA	TERM	ILLEGAL	
	L	H	L	X	BA, CA, A10	READ / WRITE	ILLEGAL	
	L	L	H	H	BA, RA	ACT	ILLEGAL	
	L	L	H	L	BA, A10	PRE / PREA	ILLEGAL	
	L	L	L	H	X	REFA	ILLEGAL	
	L	L	L	L	Op-Code, Mode-Add	MRS	ILLEGAL	

ABBREVIATIONS:
H=High Level, L=Low Level, X=Don't Care
BA=Bank Address, RA=Row Address, CA=Column Address, NOP=No Operation

NOTES:
1. All entries assume that CKE was High during the preceding clock cycle and the current clock cycle.
2. ILLEGAL to bank in specified state; function may be legal in the bank indicated by BA, depending on the state of that bank.
3. Must satisfy bus contention, bus turn around, write recovery requirements.
4. NOP to bank precharging or in idle state. May precharge bank indicated by BA.
5. ILLEGAL if any bank is not idle.

ILLEGAL = Device operation and/or data-integrity are not guaranteed.

8 Mbit SPI Serial Flash
SST25VF080

Advance Information

FEATURES:

- **Single Voltage Read and Write Operations**
  - 2.7-3.6V for SST25VF080
- **Serial Interface Architecture**
  - SPI Compatible: Mode 0 and Mode 3
- **20 MHz Max Clock Frequency**
- **Superior Reliability**
  - Endurance: 100,000 Cycles (typical)
  - Greater than 100 years Data Retention
- **Low Power Consumption:**
  - Active Read Current: 7 mA (typical)
  - Standby Current: 8 µA (typical)
- **Flexible Erase Capability**
  - Uniform 4 KByte sectors
  - Uniform 32 KByte overlay blocks
- **Fast Erase and Byte-Program:**
  - Chip-Erase Time: 70 ms (typical)
  - Sector- or Block-Erase Time: 18 ms (typical)
  - Byte-Program Time: 14 µs (typical)
- **Auto Address Increment (AAI) Programming**
  - Decrease total chip programming time over Byte-Program operations
- **End-of-Write Detection**
  - Software Status
- **Hold Pin (HOLD#)**
  - Suspends a serial sequence to the memory without deselecting the device
- **Write Protection (WP#)**
  - Enables/Disables the Lock-Down function of the status register
- **Software Write Protection**
  - Write protection through Block-Protection bits in status register
- **Temperature Range**
  - Commercial: 0°C to +70°C
  - Industrial: -40°C to +85°C
- **Packages Available**
  - 8-lead SOIC 200 mil body width

PRODUCT DESCRIPTION

SST's serial flash family features a four-wire, SPI-compatible interface that allows for a low pin-count package occupying less board space and ultimately lowering total system costs. SST25VF080 SPI serial flash memories are manufactured with SST's proprietary, high performance CMOS SuperFlash technology. The split-gate cell design and thick-oxide tunneling injector attain better reliability and manufacturability compared with alternate approaches.

The SST25VF080 devices significantly improve performance, while lowering power consumption. The total energy consumed is a function of the applied voltage, current, and time of application. Since for any given voltage range, the SuperFlash technology uses less current to program and has a shorter erase time, the total energy consumed during any Erase or Program operation is less than alternative flash memory technologies. The SST25VF080 devices operate with a single 2.7-3.6V power supply.

The SST25VF080 devices are offered in an 8-lead SOIC package with 200 mil body width. See Figure 1 for pin assignments.

©2003 Silicon Storage Technology, Inc.

The SST logo and SuperFlash are registered Trademarks of Silicon Storage Technology, Inc.
These specifications are subject to change without notice.

FUNCTIONAL BLOCK DIAGRAM

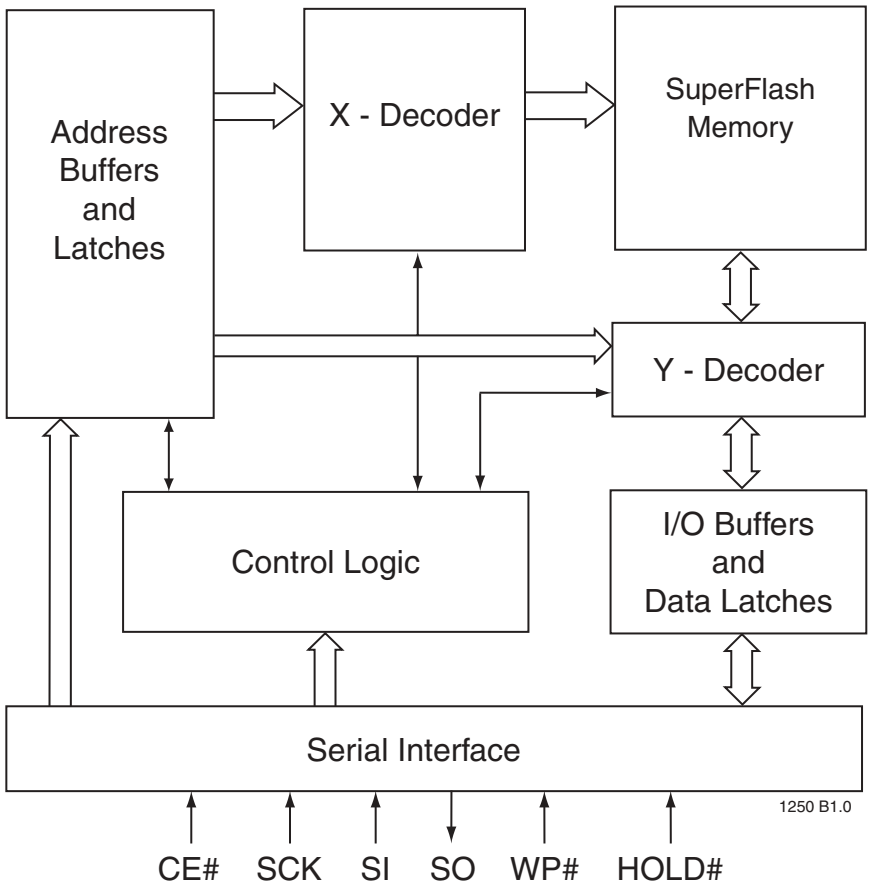

8 Mbit SPI Serial Flash
SST25VF080

Advance Information

PIN DESCRIPTION

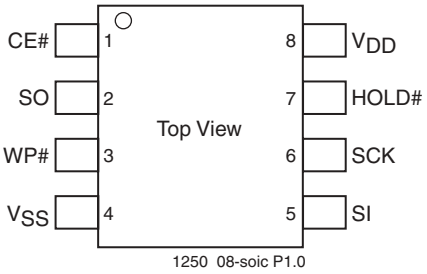

FIGURE 1: PIN ASSIGNMENTS FOR 8-LEAD SOIC

TABLE 1: PIN DESCRIPTION

Symbol	Pin Name	Functions
SCK	Serial Clock	To provide the timing of the serial interface. Commands, addresses, or input data are latched on the rising edge of the clock input, while output data is shifted out on the falling edge of the clock input.
SI	Serial Data Input	To transfer commands, addresses, or data serially into the device. Inputs are latched on the rising edge of the serial clock.
SO	Serial Data Output	To transfer data serially out of the device. Data is shifted out on the falling edge of the serial clock.
CE#	Chip Enable	The device is enabled by a high to low transition on CE#. CE# must remain low for the duration of any command sequence.
WP#	Write Protect	The Write Protect (WP#) pin is used to enable/disable BPL bit in the status register.
HOLD#	Hold	To temporarily stop serial communication with SPI flash memory without resetting the device.
V_{DD}	Power Supply	To provide power supply voltage: 2.7-3.6V for SST25VF080
V_{SS}	Ground	

T1.0 1250

ESMT M12L16161A

SDRAM 512K x 16Bit x 2Banks Synchronous DRAM

FEATURES

- JEDEC standard 3.3V power supply
- LVTTL compatible with multiplexed address
- Dual banks operation
- MRS cycle with address key programs
  - CAS Latency (2 & 3)
  - Burst Length (1, 2, 4, 8 & full page)
  - Burst Type (Sequential & Interleave)
- All inputs are sampled at the positive going edge of the system clock
- Burst Read Single-bit Write operation
- DQM for masking
- Auto & self refresh
- 32ms refresh period (2K cycle)

GENERAL DESCRIPTION

The M12L16161A is 16,777,216 bits synchronous high data rate Dynamic RAM organized as 2 x 524,288 words by 16 bits, fabricated with high performance CMOS technology. Synchronous design allows precise cycle control with the use of system clock I/O transactions are possible on every clock cycle. Range of operating frequencies, programmable burst length and programmable latencies allow the same device to be useful for a variety of high bandwidth, high performance memory system applications.

ORDERING INFORMATION

Part NO.	MAX Freq.	PACKAGE	COMMENTS
M12L16161A-5TG	200MHz	TSOP(II)	Pb-free
M12L16161A-7TG	143MHz	TSOP(II)	Pb-free
M12L16161A-7BG	143MHz	VFBGA	Pb-free

PIN CONFIGURATION (TOP VIEW)

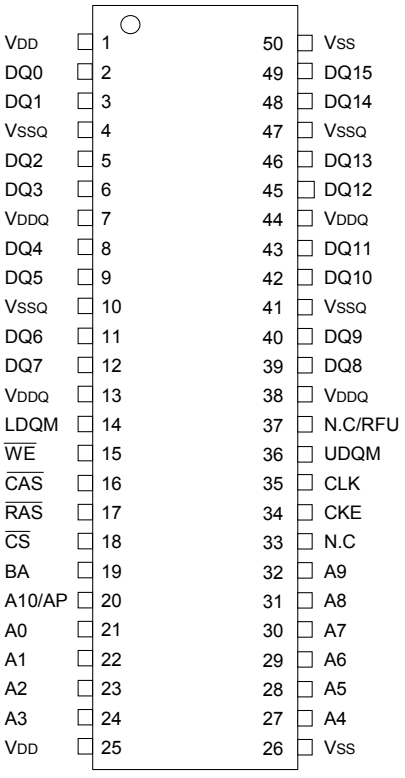

50PIN TSOP(II)
(400mil x 825mil)
(0.8 mm PIN PITCH)

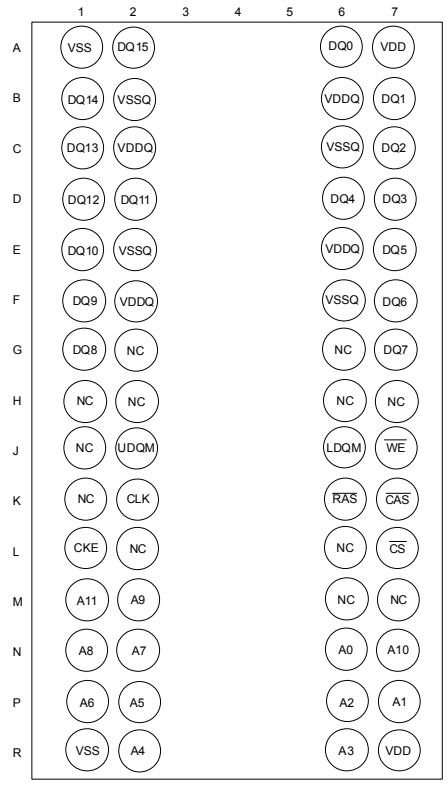

60 Ball VFBGA
(6.4x10.1mm)
(0.65mm ball pitch)

FUNCTIONAL BLOCK DIAGRAM

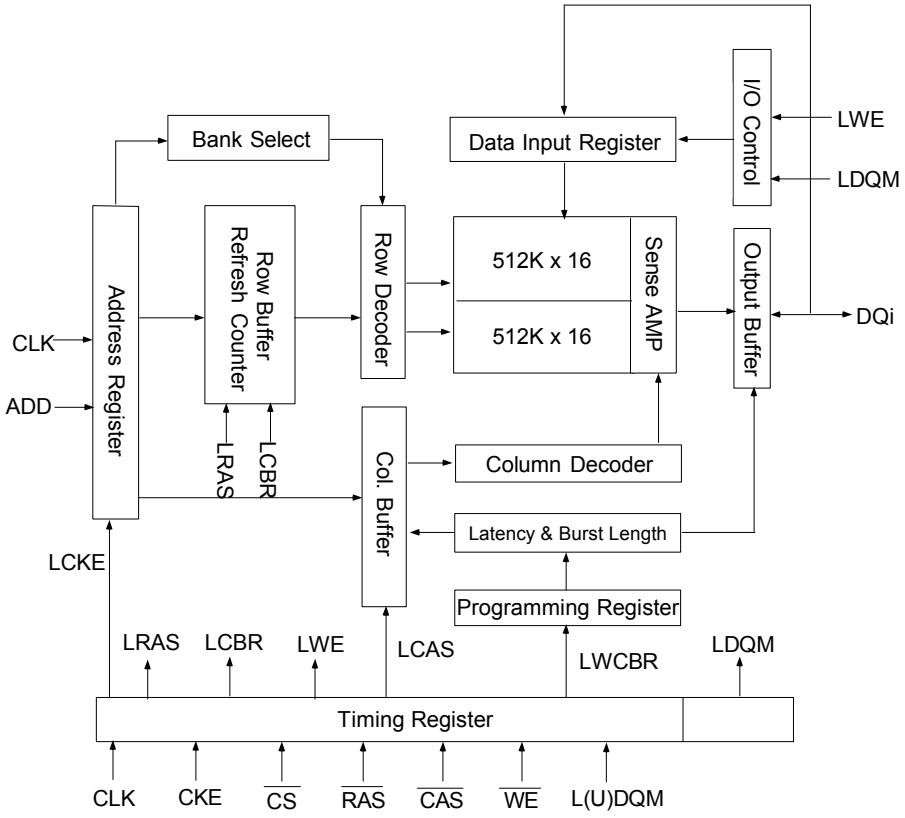

PIN FUNCTION DESCRIPTION

Pin	Name	Input Function
CLK	*System Clock*	Active on the positive going edge to sample all inputs.
$\overline{CS}$	*Chip Select*	Disables or enables device operation by masking or enabling all inputs except CLK, CKE and L(U)DQM.
CKE	*Clock Enable*	Masks system clock to freeze operation from the next clock cycle. CKE should be enabled at least one cycle prior to new command. Disable input buffers for power down in standby.
A0 ~ A10/AP	*Address*	Row / column addresses are multiplexed on the same pins. Row address : RA0 ~ RA10, column address : CA0 ~ CA7
BA	*Bank Select Address*	Selects bank to be activated during row address latch time. Selects bank for read/write during column address latch time.
$\overline{RAS}$	*Row Address Strobe*	Latches row addresses on the positive going edge of the CLK with $\overline{RAS}$ low. Enables row access & precharge.
$\overline{CAS}$	*Column Address Strobe*	Latches column addresses on the positive going edge of the CLK with $\overline{CAS}$ low. Enables column access.
$\overline{WE}$	*Write Enable*	Enables write operation and row precharge. Latches data in starting from $\overline{CAS}$, $\overline{WE}$ active.
L(U)DQM	*Data Input / Output Mask*	Makes data output Hi-Z, tSHZ after the clock and masks the output. Blocks data input when L(U)DQM active.

DQ0 ~ 15	*Data Input / Output*	Data inputs/outputs are multiplexed on the same pins.
VDD/VSS	*Power Supply/Ground*	Power and ground for the input buffers and the core logic.
VDDQ/VSSQ	*Data Output Power/Ground*	Isolated power supply and ground for the output buffers to provide improved noise immunity.
N.C/RFU	*No Connection/ Reserved for Future Use*	This pin is recommended to be left No Connection on the device.

CIRRUS LOGIC

CS497xx Data Sheet

FEATURES

- Multi-standard 32-bit High Definition Audio Decoding plus Post Processing
- Supports high-definition audio formats including:
  - Dolby Digital® Plus
  - Dolby® TrueHD
  - DTS-HD™ High Resolution Audio
  - DTS-HD™ Master Audio
  - DSD®
- Framework™ Applications Library in ROM
  - Dolby Digital® EX, Dolby® Pro Logic® IIx, Dolby Headphone®, Dolby Virtual Speaker®
  - DTS-ES 96/24™, DTS-ES™ Discrete 6.1, DTS-ES™ Matrix 6.1
  - AAC™ Multichannel 5.1
  - SRS® CS2® and TSXT®
  - THX® Ultra2™, THX® ReEQ™
  - Crossbar Mixer, Signal Generator
  - Advanced Post-Processor including: 7.1 Bass Manager, Tone Control, 11- Band Parametric EQ, Delay, 1:2 Upsampler
  - Microsoft® HDCD®
- Additional Framework™ Applications for Download
  - Thomson MP3 Surround, DTS:Neo6™, DSD-to-PCM Conversion, Neural Surround, Cirrus Original Multi-Channel Surround 2 (COMS2), and more. Please contact your local FAE for more information on available applications.
- Up to 12 Channels of 32-bit Serial Audio Input

32-bit High Definition Audio Decoder DSP Family with Dual DSP Engine Technology

- Customer Software Security Keys
- 6 Channel DSD® Input
- 16 Ch x 32-bit PCM Out with Dual 192 kHz SPDIF Tx
- Two SPI™/I²C®, One Parallel and One UART Port
- Large On-chip X, Y, and Program RAM & ROM
- SDRAM and Serial/Parallel Flash Memory Support

The CS497xx DSP family is an enhanced version of the CS4953x DSP family with higher overall performance. In addition to all the mainstream audio processing codes in on-chip ROM that the CS4953x DSP offers, the CS497xx device family also supports the decoding of major high-definition audio formats. Additionally, the CS497xx, a dual-core device, performs the high-definition audio decoding on the first core, leaving the second core available for audio post-processing and audio enhancement. The CS497xx device will support the most demanding audio post processing requirements. It is also designed as an easy upgrade path to systems currently using the CS495xx or CS4953x device with minor hardware and software changes.

Ordering Information

See page 33 for ordering information.

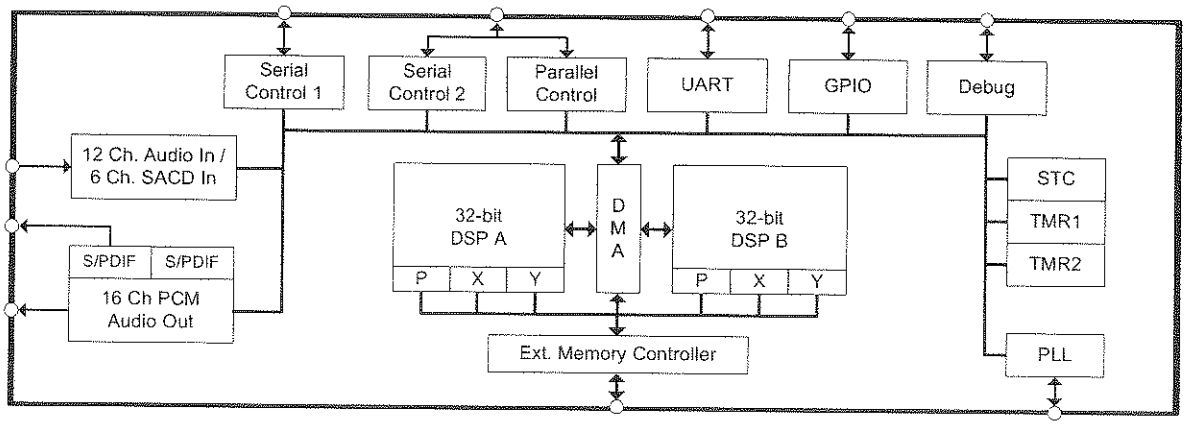

Preliminary Product Information

This document contains information for a new product.
Cirrus Logic reserves the right to modify this product without notice.

©Copyright 2007 Cirrus Logic (All Rights Reserved)

8. Device Pin-Out Diagram

8.1 144-pin LQFP Pin-Out Diagram

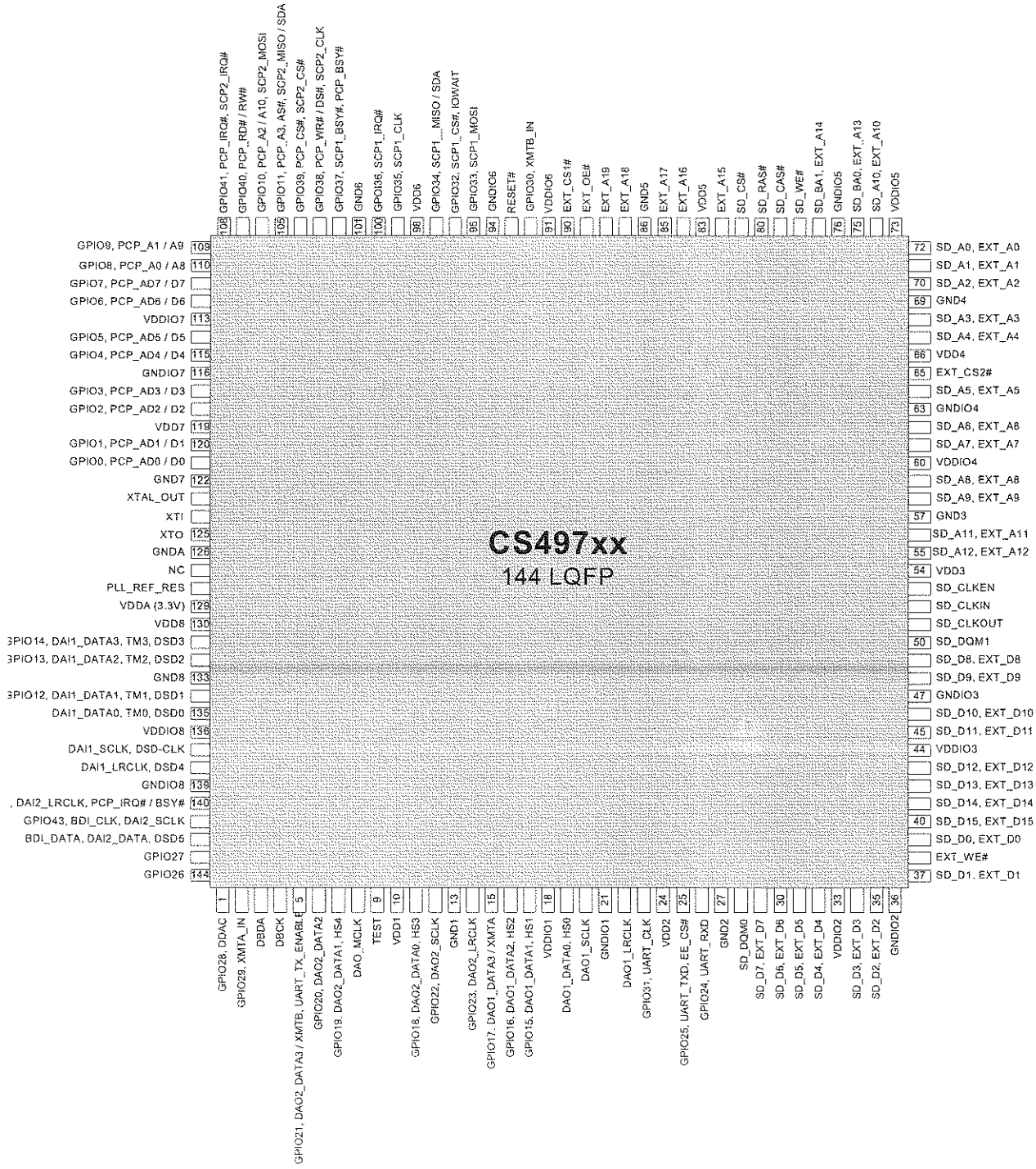

Figure 23. 144-Pin LQFP Pin-Out Diagram

©Copyright 2007 Cirrus Logic (All Rights Reserved)

MK2302S-01

Multiplier and Zero Delay Buffer

Description

The MK2302S-01is a high performance Zero Delay Buffer (ZDB) which integrates ICS' proprietary analog/digital Phase Locked Loop (PLL) techniques. The chip is part of ICS' ClockBlocks™ family and was designed as a performance upgrade to meet today's higher speed and lower voltage requirements. The zero delay feature means that the rising edge of the input clock aligns with the rising edges of both output clocks, giving the appearance of no delay through the device. There are two outputs on the chip, one being a low-skew divide by two of the other output.

The MK2302S-01 is ideal for synchronizing outputs in a large variety of systems, from personal computers to data communications to graphics/video. By allowing off-chip feedback paths, the device can eliminate the delay through other devices.

Features

- 8 pin SOIC package
- Low input to output skew of 250ps max
- Absolute jitter ± 500ps
- Propagation Delay ± 350ps
- Ability to choose between different multipliers from 0.5X to 16X
- Output clock frequency up to 133 MHz at 3.3V
- Can recover degraded input clock duty cycle
- Output clock duty cycle of 45/55
- Full CMOS clock swings with 25mA drive capability at TTL levels
- Advanced, low power CMOS process
- Operating voltage of 3.3V or 5V
- Industrial temperature version available

Block Diagram

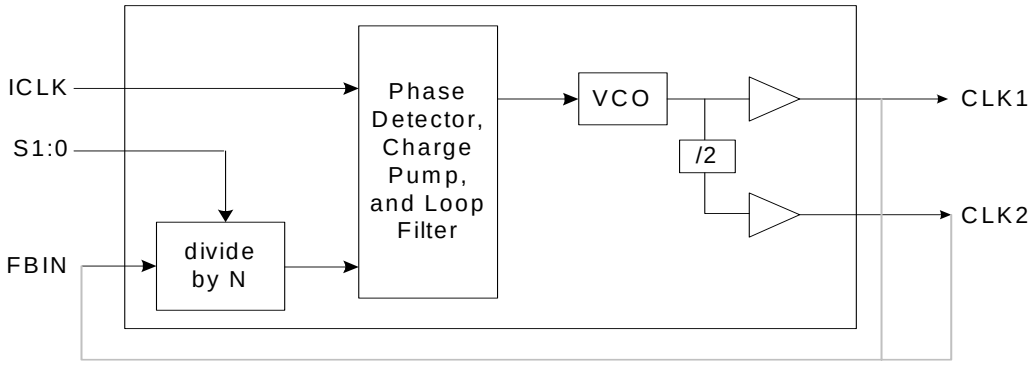

External feedback can come from CLK1 or CLK2 (see table on page 2)

Pin Assignment

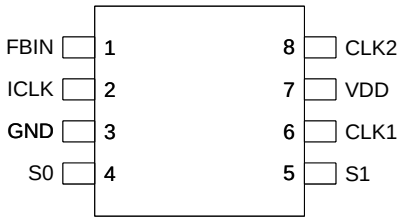

8 pin (150 mil) SOIC

Clock Multiplier Decoding Table 1

(Multiplies Input clock by shown amount)

FBIN	S1	S0	CLK1	CLK2
CLK1	0	0	2 X ICLK	ICLK
CLK1	0	1	4 X ICLK	2 X ICLK
CLK1	1	0	ICLK	ICLK/2
CLK1	1	1	8 X ICLK	4 X ICLK
CLK2	0	0	4 X ICLK	2 X ICLK
CLK2	0	1	8 X ICLK	4 X ICLK
CLK2	1	0	2 X ICLK	ICLK
CLK2	1	1	16 X ICLK	8 XICLK

Pin Descriptions

Pin Number	Pin Name	Pin Type	Pin Description
1	FBIN	Input	Feedback clock input.
2	ICLK	Input	Reference clock input.
3	GND	Power	Connect to ground.
4	S0	Input	Select 0 for output clock per decoding table above. Pull-up.
5	S1	Input	Select 1 for output clock per decoding table above. Pull up.
6	CLK1	Output	Clock output per table above.
7	VDD	Power	Connect to +3.3V or +5.0V.
8	CLK2	Output	Clock output per table above. Low skew divide by two of pin 6 clock.

Multiformat Video Encoder
Six, 11-Bit, 297 MHz DACs
ADV7342/ADV7343

FEATURES

- 74.25 MHz 20-/30-bit high definition input support
  - Compliant with SMPTE 274M (1080i), 296M (720p), and 240M (1035i)
- 6, 11-bit, 297 MHz video DACs
  - 16× (216 MHz) DAC oversampling for SD
  - 8× (216 MHz) DAC oversampling for ED
  - 4× (297 MHz) DAC oversampling for HD
  - 37 mA maximum DAC output current
- NTSC M, PAL B/D/G/H/I/M/N, PAL 60 support
- NTSC and PAL square pixel operation (24.54 MHz/29.5 MHz)
- Multiformat video input support
  - 4:2:2 YCrCb (SD, ED, and HD)
  - 4:4:4 YCrCb (ED and HD)
  - 4:4:4 RGB (SD, ED, and HD)
- Multiformat video output support
  - Composite (CVBS) and S-Video (Y/C)
  - Component YPrPb (SD, ED, and HD)
  - Component RGB (SD, ED, and HD)
- Macrovision® Rev 7.1.L1 (SD) and Rev 1.2 (ED) compliant
- Simultaneous SD and ED/HD operation
- EIA/CEA-861B compliance support
- Programmable features
  - Luma and chroma filter responses
  - Vertical blanking interval (VBI)
  - Subcarrier frequency (F_{SC}) and phase
  - Luma delay
- Copy generation management system (CGMS)
- Closed captioning and wide screen signaling (WSS)
- Integrated subcarrier locking to external video source
- Complete on-chip video timing generator
- On-chip test pattern generation
- On-board voltage reference (optional external input)
- Serial MPU interface with dual I²C® and SPI® compatibility
- 3.3 V analog operation
- 1.8 V digital operation
- 3.3 V I/O operation
- Temperature range: −40°C to +85°C

APPLICATIONS

- DVD recorders and players
- High definition Blu-ray DVD players
- HD-DVD players

FUNCTIONAL BLOCK DIAGRAM

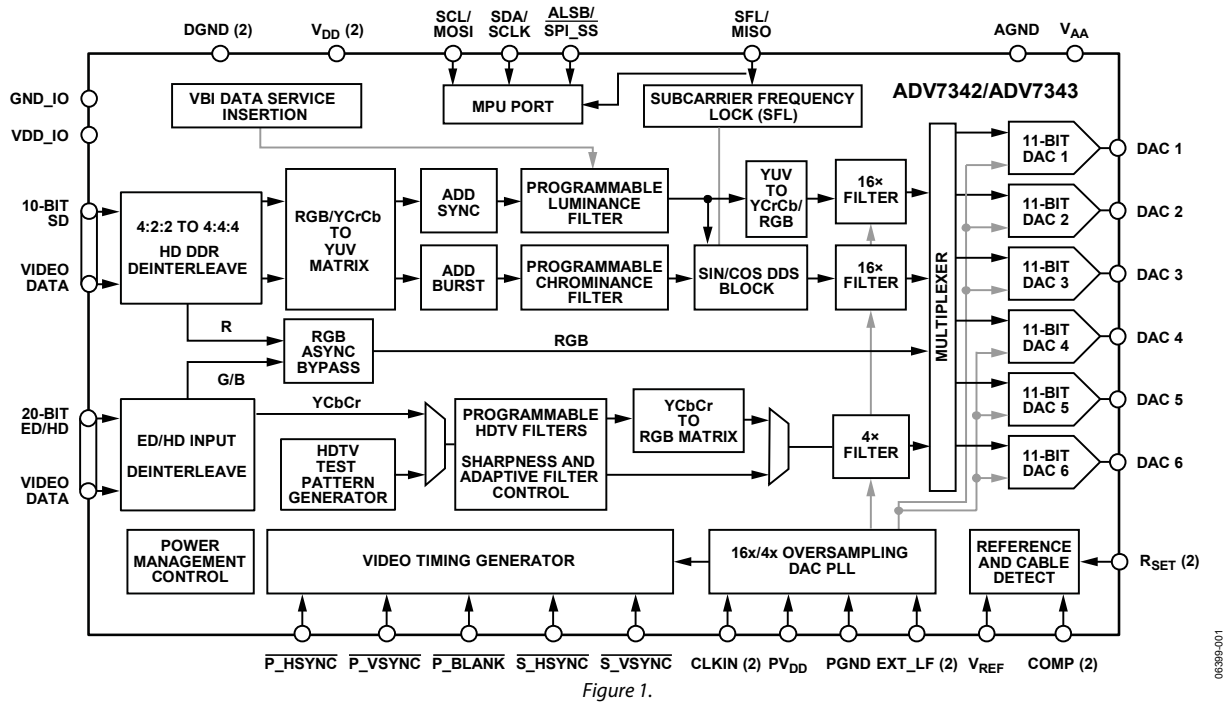

Figure 1.

Protected by U.S. Patent Numbers 5,343,196 and 5,442,355 and other intellectual property rights.
Protected by U.S. Patent Numbers 4,631,603, 4,577,216, 4,819,098 and other intellectual property rights.

Rev. 0

Information furnished by Analog Devices is believed to be accurate and reliable. However, no responsibility is assumed by Analog Devices for its use, nor for any infringements of patents or other rights of third parties that may result from its use. Specifications subject to change without notice. No license is granted by implication or otherwise under any patent or patent rights of Analog Devices. Trademarks and registered trademarks are the property of their respective owners.

One Technology Way, P.O. Box 9106, Norwood, MA 02062-9106, U.S.A.
Tel: 781.329.4700 www.analog.com
Fax: 781.461.3113 ©2006 Analog Devices, Inc. All rights reserved.

ADV7342/ADV7343

PIN CONFIGURATION AND FUNCTION DESCRIPTIONS

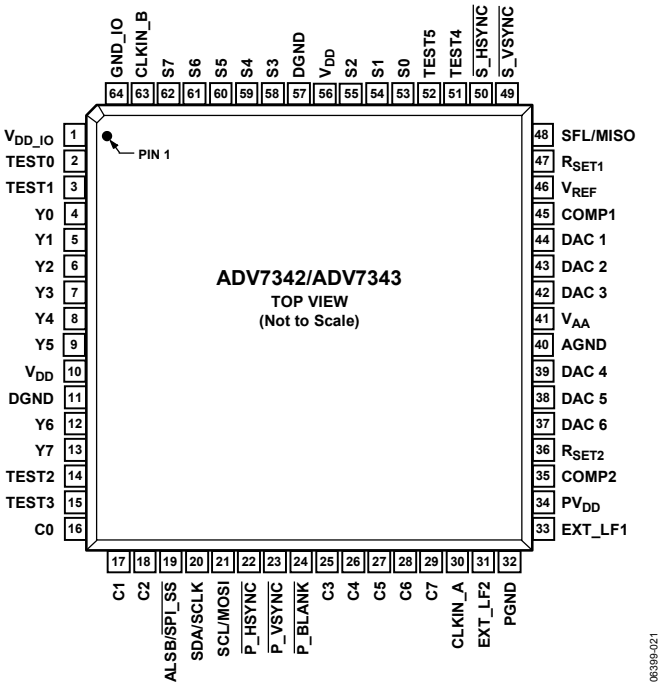

Figure 21. Pin Configuration

Table 13. Pin Function Descriptions

Pin No.	Mnemonic	Input/ Output	Description
13, 12, 9 to 4	Y7 to Y0	I	8-Bit Pixel Port. Y0 is the LSB. Refer to Table 31 for input modes.
29 to 25, 18 to 16	C7 to C0	I	8-Bit Pixel Port. C0 is the LSB. Refer to Table 31 for input modes.
62 to 58, 55 to 53	S7 to S0	I	8-Bit Pixel Port. S0 is the LSB. Refer to Table 31 for input modes.
52, 51, 15, 14, 3, 2	TEST5 to TEST0	I	Unused. These pins should be connected to DGND.
30	CLKIN_A	I	Pixel Clock Input for HD Only (74.25 MHz), ED[1] Only (27 MHz or 54 MHz) or SD Only (27 MHz).
63	CLKIN_B	I	Pixel Clock Input for Dual Modes Only. Requires a 27 MHz reference clock for ED operation or a 74.25 MHz reference clock for HD operation.
50	$\overline{\text{S\_HSYNC}}$	I/O	SD Horizontal Synchronization Signal. This pin can also be configured to output an SD, ED, or HD horizontal synchronization signal. See the External Horizontal and Vertical Synchronization Control section.
49	$\overline{\text{S\_VSYNC}}$	I/O	SD Vertical Synchronization Signal. This pin can also be configured to output an SD, ED, or HD vertical synchronization signal. See the External Horizontal and Vertical Synchronization Control section.
22	$\overline{\text{P\_HSYNC}}$	I	ED/HD Horizontal Synchronization Signal. See the External Horizontal and Vertical Synchronization Control section.
23	$\overline{\text{P\_VSYNC}}$	I	ED/HD Vertical Synchronization Signal. See the External Horizontal and Vertical Synchronization Control section.
24	$\overline{\text{P\_BLANK}}$	I	ED/HD Blanking Signal. See the External Horizontal and Vertical Synchronization Control section.
48	SFL/MISO	I/O	Multifunctional Pin: Subcarrier Frequency Lock (SFL) Input/SPI Data Output. The SFL input is used to drive the color subcarrier DDS system, timing reset, or subcarrier reset.
47	R_{SET1}	I	This pin is used to control the amplitudes of the DAC 1, DAC 2, and DAC 3 outputs. For full-drive operation (for example, into a 37.5 Ω load), a 510 Ω resistor must be connected from R_{SET1} to AGND. For low drive operation (for example, into a 300 Ω load), a 4.12 kΩ resistor must be connected from R_{SET1} to AGND.

Pin No.	Mnemonic	Input/ Output	Description
36	R_{SET2}	I	This pin is used to control the amplitudes of the DAC 4, DAC 5, and DAC 6 outputs. A 4.12 kΩ resistor must be connected from R_{SET2} to AGND.
45, 35	COMP1, COMP2	O	Compensation Pins. Connect a 2.2 nF capacitor from both COMP pins to V_{AA}.
44, 43, 42	DAC 1, DAC 2, DAC 3	O	DAC Outputs. Full and low drive capable DACs.
39, 38, 37	DAC 4, DAC 5, DAC 6	O	DAC Outputs. Low drive only capable DACs.
21	SCL/MOSI	I	Multifunctional Pin: I²C Clock Input/SPI Data Input.
20	SDA/SCLK	I/O	Multifunctional Pin: I²C Data Input/Output. Also, SPI clock input.
19	ALSB/$\overline{\text{SPI\_SS}}$	I	Multifunctional Pin: This signal sets up the LSB[2] of the MPU I²C address. Also, SPI slave select.
46	V_{REF}		Optional External Voltage Reference Input for DACs or Voltage Reference Output.
41	V_{AA}	P	Analog Power Supply (3.3 V).
10, 56	V_{DD}	P	Digital Power Supply (1.8 V). For dual-supply configurations, V_{DD} can be connected to other 1.8 V supplies through a ferrite bead or suitable filtering.
1	V_{DD_IO}	P	Input/Output Digital Power Supply (3.3 V).
34	PV_{DD}	P	PLL Power Supply (1.8 V). For dual-supply configurations, PV_{DD} can be connected to other 1.8 V supplies through a ferrite bead or suitable filtering.
33	EXT_LF1	I	External Loop Filter for On-Chip PLL 1.
31	EXT_LF2	I	External Loop Filter for On-Chip PLL 2.
32	PGND	G	PLL Ground Pin.
40	AGND	G	Analog Ground Pin.
11, 57	DGND	G	Digital Ground Pin.
64	GND_IO	G	Input/Output Supply Ground Pin.

[1] ED = enhanced definition = 525p and 625p.
[2] LSB = least significant bit. In the ADV7342, setting the LSB to 0 sets the I²C address to 0xD4. Setting it to 1 sets the I²C address to 0xD6. In the ADV7343, setting the LSB to 0 sets the I²C address to 0x54. Setting it to 1 sets the I²C address to 0x56.

TOSHIBA TC74HCU04AP/AF/AFN

TOSHIBA CMOS DIGITAL INTEGRATED CIRCUIT SILICON MONOLITHIC

TC74HCU04AP, TC74HCU04AF, TC74HCU04AFN

HEX INVERTER

(Note) The JEDEC SOP (FN) is not available in Japan.

The TC74HCU04A is a high speed CMOS INVERTER fabricated with silicon gate C^2MOS technology.
It achieves the high speed operation similar to equivalent LSTTL while maintaining the CMOS low power dissipation.
Since the internal circit is composed of a single stage inverter, it can be used in analog applications such as crystal oscllators.
All inputs are equipped with protection circuits against static discharge or transient excess voltage.

FEATURES :

- High Speed ····· t_{pd} = 4ns(typ.) at V_{CC} = 5V
- Low Power Dissipation ····· I_{CC} = 1μA(Max.) at Ta = 25°C
- High Noise Immunity ····· $V_{NIH} = V_{NIH}$ = 10% V_{CC} (Min.)
- Output Drive Capability ····· 10 LSTTL Loads
- Symmetrical Output Impedance ··· $|I_{OH}| = I_{OL}$ = 4mA(Min.)
- Balanced Propagation Delays ····· $t_{pLH} \simeq t_{pHL}$
- Wide Operating Voltage Range ·· V_{CC}(opr.) = 2V ~ 6V
- Pin and Function Compatible with 74LS04

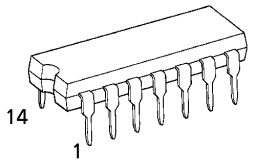

P (DIP14-P-300-2.54)
Weight : 0.96g (Typ.)

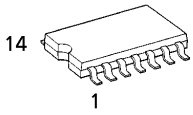

F (SOP14-P-300-1.27)
Weight : 0.18g (Typ.)

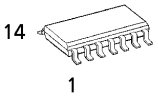

FN (SOL14-P-150-1.27)
Weight : 0.12g (Typ.)

PIN ASSIGNMENT

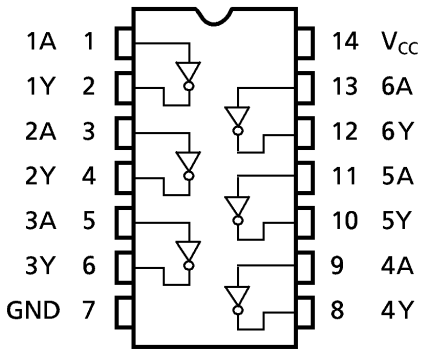

(TOP VIEW)

IEC LOGIC SYMBOL

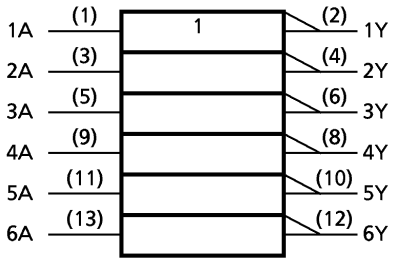

TRUTH TABLE

A	Y
L	H
H	L

961001EBA2

IC51 XM IC

1. Overview

The XM Digital Transceiver Integrated Circuit (XM/DT IC) provides a cost effective means for an electronics equipment manufacturer to be XM Satellite Radio compatible by multiplexing data and audio streams between the XM Receiver and User Interface Controller into a 2 wire time division duplex (TDD) high frequency serial link.

In a typical application, two XM/ DT IC devices connect to each other via a differential link as depicted on Figure 1.1 below. In the 'Slave' unit ("XM/DT Digital Transceiver" (antenna)), the XM/DT IC interfaces directly to the XM Radio receiver chipset taking in a real-time PCM (I2S) audio stream along with data information. The XM/DT IC stores this data in internal RAM and then time division multiplexes the data on a 2-wire serial communication link. This link provides for the physical decoupling of the Slave and Master side of up 100 meters with software transparency between the Master side processor and audio circuitry and the Slave side XM Satellite Radio receiver chip set.

In the Master unit ("XM/DT Ready Radio"), the XM/DT IC demultiplexes the received data, buffers it internally and reproduces it for consumption. The XM/DT IC is capable of simultaneously sending and receiving serial frames while multiplexing and de-multiplexing them in real time, formatting them and then routing them into the appropriate Slave or Master side interfaces.

The software interface between the user interface and the receiver is unaffected by the introduction of the XM/DT IC link pair.

An input pin on the XM/DT IC configures the part's functionality as either Master (user interface end) or Slave (XM Digital Transceiver end) allowing the same IC to be used at either end of the link.

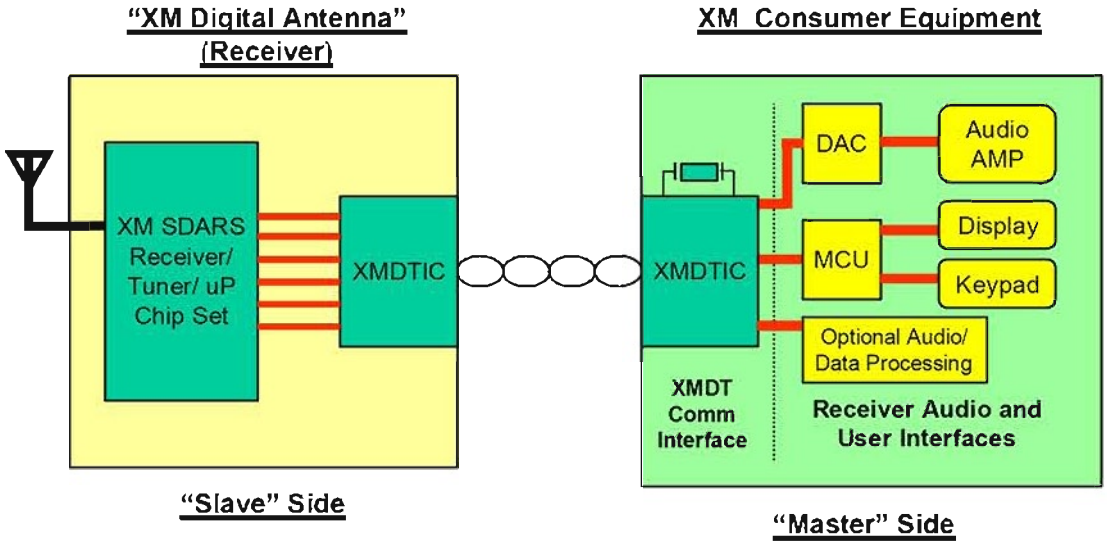

Figure 1.1 - Typical XM/DT Application

2. Functional Description

Figure 2.1 below shows a basic top level diagram showing each functional block in the XM/DT device.

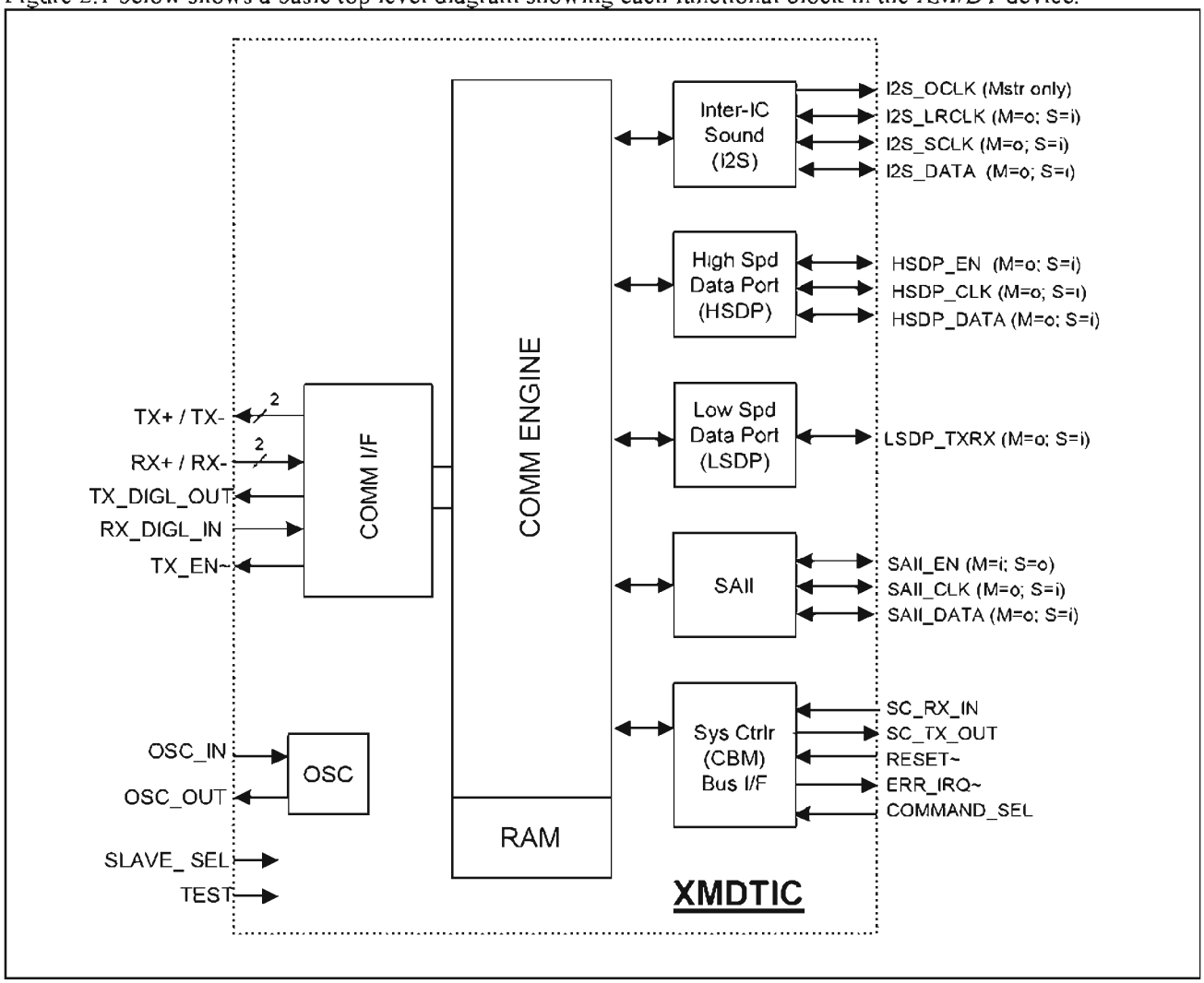

Figure 2.1 XM/DT Top Level Diagram

The XM/DT IC is broken into the following functional blocks:

SC I/F – System Controller Interface

The System Controller Interface transports the serial communication commands and data between the microprocessor in the user interface device and the microprocessor in the XM Digital Antenna. The commands and data transported follow typically follow the XM CBM (Common Bus Messaging) protocol.

The System Controller Interface functional block consists of a full duplex asynchronous serial interface. The SC I/F is used for both the software configuration of the XM/DT IC, monitoring of XM/DT link status, and transparent communications with the SC I/F at the other end of the communications link. The SC I/F block contains five signals, SC_RX_IN, SC_TX_OUT, COMMAND_SEL, ERR_IRQ#, and RESET#.

The SC_RX_IN and SC_TX_OUT connect the asynchronous serial communications to the respective microprocessors. The SC I/F

communicates at a default mode of 9600 baud, no parity, 8 data bits, and 1 stop bit. The baud rate can be changed using the XM/DT IC Command Mode. The Master and Slave baud rates must be set to the same rate by their respective microprocessors.

The COMMAND_SEL input allows configuration of the XM/DT IC and to retrieve feedback of the link status during normal operation. This signal is logic low for normal operation and logic high for Command/Stat Mode. Details of the operation of this signal are described in the Programming section of this specification.

The ERR_IRQ# output signal is active low when an error occurs on the link if interrupts are enabled via the Interrupt Mask register. Access to the Interrupt Mask register is gained via the Command Mode and the interrupt source identification is obtained via the Status Mode. Details of these modes are described in the Programming section of this specification.

The RESET# input signal is used to perform a complete asynchronous reset of the XM/DT IC. The RESET# signal is also used to place the XM/DT IC into Command Mode. Refer to the Programming section.

SAII – Synchronous Audio Input Interface

The SAII Interface functional block provides a synchronous interface with hardware flow control from the Master to the Slave devices.

In Master mode, the XM/DT IC receives SAII Data and SAII Clock from the SAII source in the "playback unit". The SAII Enable (SAII_EN) output signal is fed back to the SAII source to control the flow of input data based on the state of the SAII_EN signal at the Slave Device.

In Slave mode, the XM/DT IC sends SAII Data and SAII Clock to the Slave device SAII receiver, and receives the SAII_EN signal from the SAII receiver to control the flow of transmitted data.

The Master XM/DT IC adapts to the incoming SAII data rate.

LSDP – Low Speed Data Port

The LSDP functional block consists of a unidirectional asynchronous serial interface.

In Master mode, the LSDP transmits data out of the device. In Slave mode, the LSDP receives data into the device.

This interface operates in default mode at 115200, no parity, 8 data bits, and 1 stop bit.

HSDP – High Speed Data Port Interface

The HSDP Interface functional block provides a synchronous serial interface combined with a framing signal from the Slave XM/DT IC to the Master XM/DT IC.

The source of the HSDP is typically the XM receiver chipset. The HSDP data is typically received by the Host microprocessor. The HSDP signals include a serial data bitstream (HSDP_DA), a synchronous clock (HSDP_CLK), and a framing signal (HSDP_EN). The framing signal can be used as a gating mechanism for the clock or an interrupt source to indicate the beginning and end of the HSDP data burst.

In Slave mode, the HSDP Interface receives HSDP_DA, HSDP_CLK, and HSDP_EN from the HSDP source. In Master mode, the HSDP Interface transmits HSDP_DA, HSDP_CLK, and HSDP_EN.

I2S – Inter-IC Sound (I2S) digital audio Interface

The I2S functional block receives and transmits timing and frame sensitive data. The I2S interface is also referred to as the PCM interface.

In Slave mode, the XM/DT IC I2S Interface receives the I2S digital audio from the XM Receiver chipset. The XM/DT IC automatically adjusts to the incoming I2S data sampling rate.

In Master mode, the XM/DT IC I2S Interface generates all required signals to drive an I2S compatible audio DAC.

COMM2W – Two Wire Communications Interface

The COMM2W functional block enables communications between two XM/DT ICs. The COMM2W is differential Time-Division-Duplex Interface.

3. Physical Description

3.1 Device Pin-out

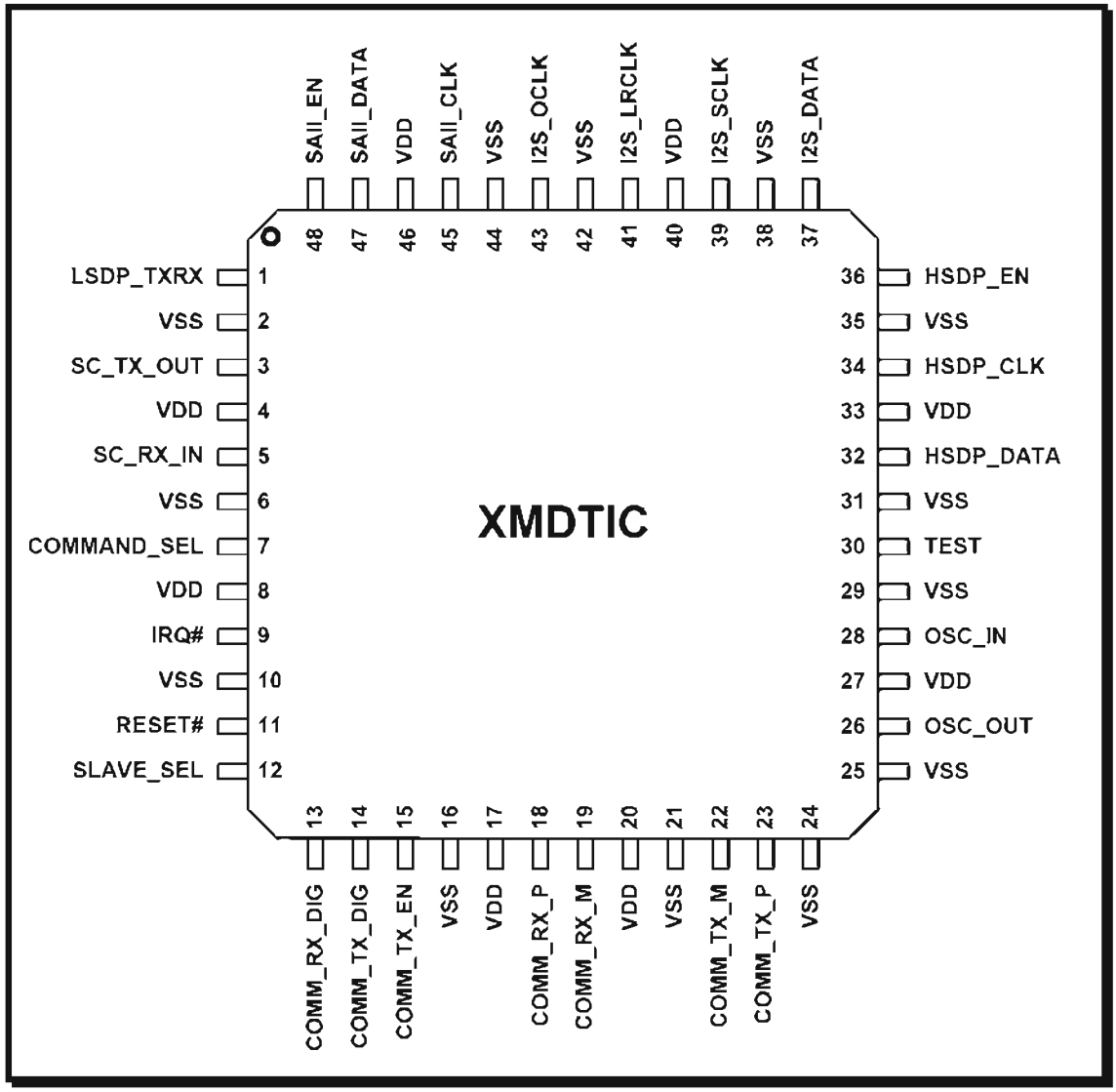

Figure 3.1 – Pin Connection (Top View)

3.2 Pin Descriptions

Table 3.2 Pin Descriptions

Pin #	Pin Name	Type	Function in Slave Mode	Function in Master Mode	Notes
1	LSDP_TXRX	S=In M=Out	Low Speed Data Port Output	Low Speed Data Port Input	LVTTL S/T
3	SC_TX_OUT	S=Out M=Out	System Controller Bus (CBM) Transmit Data Out	System Controller Bus (CBM) Transmit Data Out	4mA, SLC
5	SC_RX_IN	S=In M=In	System Controller Bus (CBM) Receive Data In	System Controller Bus (CBM) Receive Data In	LVTTL S/T
7	COMMAND_SEL	S=In M=In	Command Mode Select In (1= Command Mode, 0=Normal Mode)	Command Mode Select In (1= Command Mode, 0=Normal Mode)	LVTTL S/T
9	IRQ#	S=Out M=Out	Interrupt Request Out (Active Low)	Interrupt Request Out (Active Low)	4mA Open Drain
11	RESET#	S=In M=In	Asynchronous Reset In, (Active Low)	Asynchronous Reset In, (Active Low)	LVTTL S/T
12	SLAVE_SEL	S=In M=In	M/S Mode Select In (High = Slave Mode)	M/S Mode Select In (Low = Master Mode)	LVTTL S/T
13	COMM_RX_DIG	S=In M=In	DT Comm Bus External Transceiver Receive Data In	DT Comm Bus External Transceiver Receive Data In	LVTTL S/T
14	COMM_TX_DIG	Output	DT Comm Bus External Transceiver Transmit Data Out	DT Comm Bus External Transceiver Transmit Data Out	LVTTL S/T
15	COMM_TX_EN	Output	DT Comm Bus External Transceiver Direction Out (1=Transmit, 0=Receive)	DT Comm Bus External Transceiver Direction Out (1=Transmit, 0=Receive)	LVTTL S/T
18	COMM_RX_P	S=In M=In	DT Comm Bus Internal Receiver Differential Positive In	DT Comm Bus Internal Receiver Differential Positive In	LVDS in+
19	COMM_RX_M	S=In M=In	DT Comm Bus Internal Receiver Differential Negative In	DT Comm Bus Internal Receiver Differential Negative In	LVDS in–
22	COMM_TX_M	Output	DT Comm Bus Internal Transmitter Differential Negative Out	DT Comm Bus Internal Transmitter Differential Negative Out	LVDS out–
23	COMM_TX_P	Output	DT Comm Bus Internal Transmitter Differential Positive Out	DT Comm Bus Internal Transmitter Differential Positive Out	LVDS out+
26	OSC_OUT	Output	Crystal Output	Crystal Output	Crystal Buffer
28	OSC_IN	S=In M=In	Crystal Input	Crystal Input	Crystal Buffer
30	TEST	S=In M=In	Factory Test Mode Select (1=Test, 0= Normal Oper.)	Factory Test Mode Select (1=Test, 0= Normal Oper.)	LVTTL S/T
32	HSDP_DATA	S=In M=Out	High Speed Data Port Data Input	High Speed Data Port Data Output	Out= 4mA, SLC In=LVTTL S/T
34	HSDP_CLK	S=In M=Out	High Speed Data Port Clock Input	High Speed Data Port Clock Output	Out= 4mA, SLC In=LVTTL S/T
36	HSDP_EN	S=Out M=In	High Speed Data Port Enable Output	High Speed Data Port Enable Input	Out= 4mA, SLC In=LVTTL S/T
37	I2S_DATA	S=In M=Out	I2S Digital Port Data In	I2S Digital Audio Port Data Out	Out= 4mA, SLC In=LVTTL S/T

Pin #	Pin Name	Type	Function in Slave Mode	Function in Master Mode	Notes
39	I2S_SCLK	S=In M=Out	I2S Digital Audio Port Bit Clock In	I2S Digital Audio Port Bit Clock Out	Out= 4mA, SLC In=LVTTL S/T
41	I2S_LRCLK	S=In M=Out	I2S Digital Audio Port Left/Right Clock In	I2S Digital Audio Port Left/Right Clock Out	Out= 4mA, SLC In=LVTTL S/T
43	I2S_OCLK	S=In M=Out	I2S Digital Audio Port Oversample Clock (not used - connect to Gnd???)	I2S Digital Audio Port Oversample Clock Out	Out= 4mA, SLC
45	SAII_CLK	S=Out M=In	SAII Port Clock Output	SAII Port Clock Input	Out= 4mA, SLC 3.3V S/T
47	SAII_DATA	S=Out M=In	SAII Port Data Output	SAII Port Data Input	Out= 4mA, SLC In=LVTTL S/T
48	SAII_REQ	S=In M=Out	SAII Port Request Input	SAII Port Request Output	Out= 4mA, SLC In=LVTTL S/T

Pin#	Pin Name	Type	Function in Slave Mode	Function in Master Mode	Notes
4, 8, 17, 20, 27, 33, 40, 46	VDD	PWR	+3.3V Supply Voltage	+3.3V Supply Voltage	
2, 6, 10, 16, 21, 24, 25, 29, 31, 25, 38, 42, 44	VSS	GND	Digital Ground	Digital Ground	

Notes: All Inputs are 3.3V LVTTL compatible; S/T = Schmitt Trigger inputs; SLC = Slew Rate Controller Output

JRC **NJM2566A**

6CH VIDEO AMPLIFIER WITH SD/ HD LPF

■ GENERAL DESCRIPTION

The NJM2566A is a single supply voltage 6ch Video amplifier.

It includes LPF, Y/C MIX circuit and SDC interface. LPF for the component signal can select SD/HD.

The NJM2566A is suitable for DVD recorder, set top box and the high quality AV systems with the SD/HD output.

■ PACKAGE OUTLINE

NJM2566AV

■ FEATURES

- Operating Voltage 4.5 to 5.5V
- 6dB amplifier
- Internal 75Ω Driver Circuit (2-system drive)
- Internal LPF V,SY,SC 6.75MHz
  Y,Pb,Pr 13.5MHz (Progressive)
  30MHz (HD)
- Y/C MIX Circuit
- SDC Interface (S1/ S2)
- CLAMP/ BIAS Select (Y,Pb,Pr/ RGB)
- Power Save Circuit
- Bipolar Technology
- Package Outline SSOP32

■ BLOCK DIAGRAM

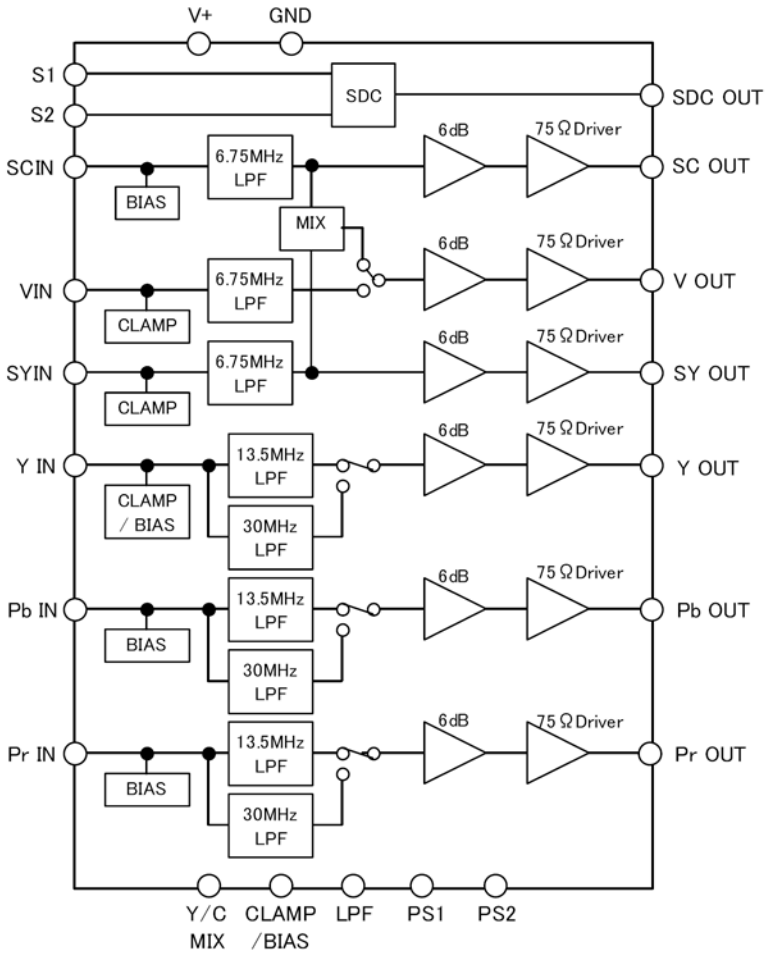

JRC **NJM2566A**

■ **CONTROL TERMINAL**

PARAMETER	STATUS	NOTE
PS1 (Power Save1)	H	(SYOUT, VOUT, SCOUT) Power Save: OFF
	L	(SYOUT, VOUT, SCOUT) Power Save: ON
	OPEN	(SYOUT, VOUT, SCOUT) Power Save: ON
PS2 (Power Save2)	H	(YOUT, PbOUT, PrOUT) Power Save: OFF
	L	(YOUT, PbOUT, PrOUT) Power Save: ON
	OPEN	(YOUT, PbOUT, PrOUT) Power Save: ON
MIX SW (Y/C MIX)	H	M/C MIX ON
	L	M/C MIX OFF
	OPEN	M/C MIX OFF
C/B SW (CLAMP/BIAS)	H	BIAS (RGB)
	L	CLAMP (Y,Pb,Pr)
	OPEN	CLAMP (Y,Pb,Pr)
LPF SW (LPF)	H	30MHz LPF
	L	13.5MHz LPF
	OPEN	13.5MHz LPF

■ **SDC OUT**

S1	S2	SDC OUT	
L (OPEN)	L (OPEN)	0V	4:3 Normal
L (OPEN)	H	2.1V	4:3 Letter box
H	H	2.1V	4:3 Letter box
H	L (OPEN)	4.6V	16:9 Squeeze

■ **PIN CONFIGURATION**

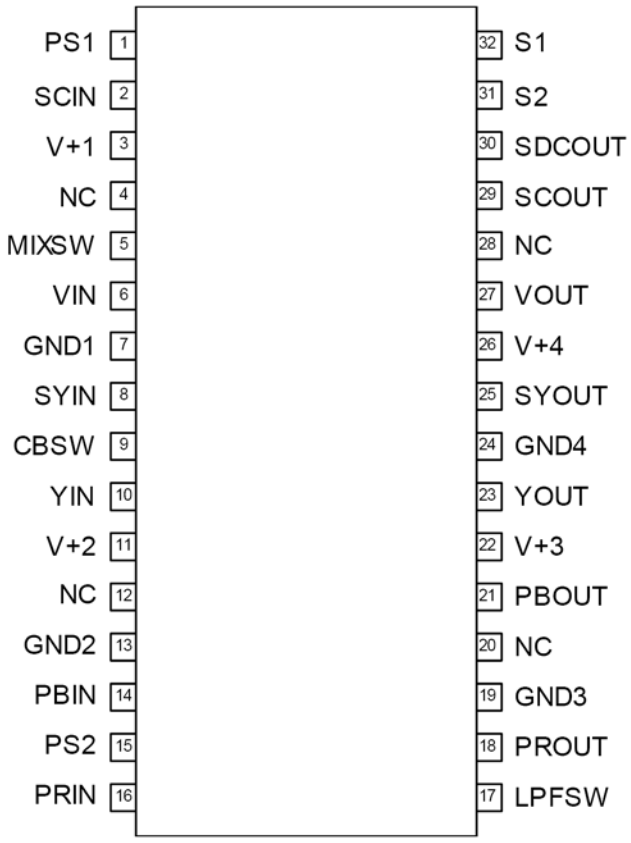

JRC **NJM2566A**

■ **TERMINAL FUNCTION**

PIN No.	PIN NAME	FUNCTION	EQUIVALENT CIRCUIT	DC VOLTAGE
1 5 9 15 17 31 32	PS1 MIXSW CBSW PS2 LPFSW S2 S1	(SY, V, SC, SDC) Power save Y/C MIX control CLAMP/ BIAS control (Y, Pb, Pr) Power save (Y, Pb, Pr) LPF control SDC control SDC control	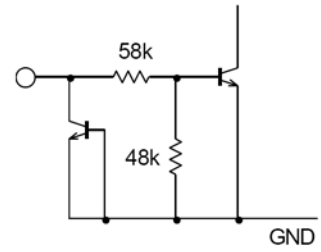	-
2 14 16	SCIN PBIN PRIN	Chroma signal input Component signal(Pb), R input Component signal(Pr), B input	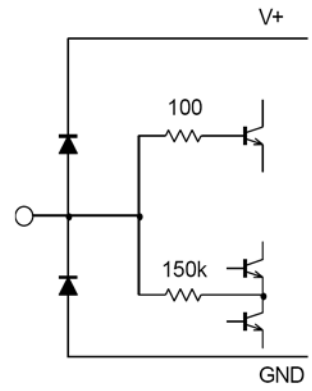	2.5V
6 8	VIN SYIN	Composite video signal input Y signal input	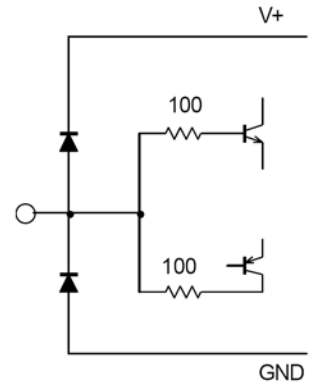	1.7V
10	YIN	Component signal(Y), G input (Note) Y signal: CLAMP G signal: BIAS	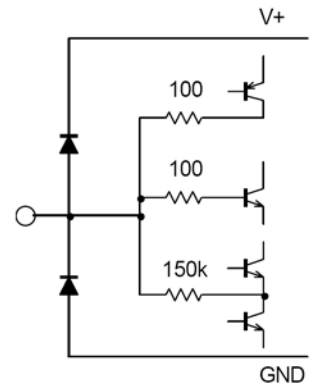	(CLAMP) 1.7V (BIAS) 2.5V

JRC NJM2566A

PIN No.	PIN NAME	FUNCTION	EQUIVALENT CIRCUIT	DC VOLTAGE
18 21 29	PROUT PBOUT SCOUT	Component signal(Cr) output Component signal(Cb) output Chroma signal output	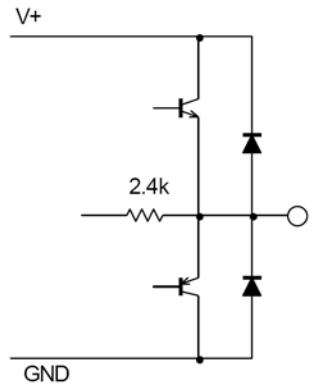	2.5V
23 25 27	YOUT SYOUT VOUT	Component signal(Y) output Y signal output Composite video signal output	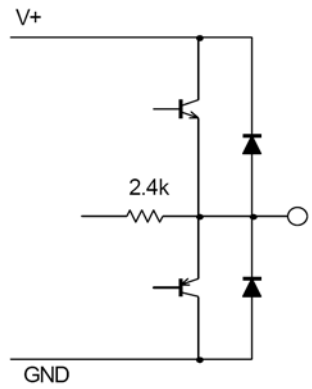	1.3V (Note) YOUT BIAS: 2.5V
30	SDCOUT	SDC output	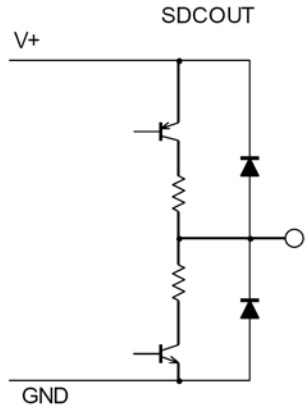	-

NJW1197FC2
[8-CHANNEL ELECTRONIC VOLUME WITH INPUT SELECTOR]

[STRUCTURE] Bi-CMOS
[CATEGORIES] 3D Surround & Sound Enhancement
[PACKAGE OUTLINE] QFP100-C2
[SOLDERING METHOD] For this device, soldering method is recommended Reflow.
[NOTE] —

BAE-45919-000-00

■ABSOLUTE MAXIMUM RATINGS Ta=25℃

Power Supply Voltage ····· +8/-8 [V]	Operating Temperature Range ····· -40 to +75 [℃]
Maximum Input Voltage ····· V^+/V^- [V]	Storage Temperature Range ····· -40 to +150 [℃]
Power Dissipation ····· 1600 [mW] (Note)	

(Note) EIA/JEDEC STANDARD Test board (76.2×114.3×1.6mm, 2layer, FR-4) mounting.

■BLOCK DIAGRAM

BDE-45919-000-00

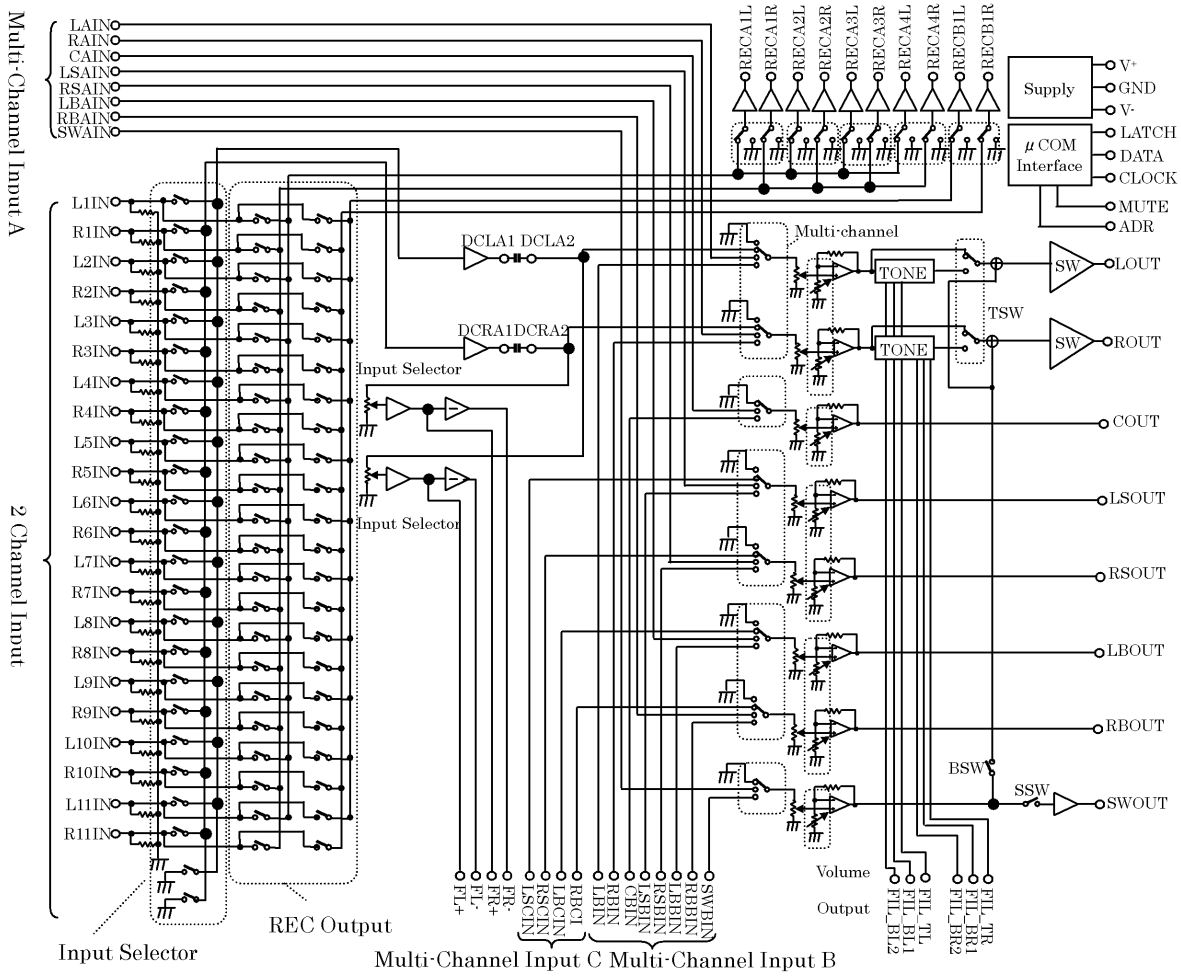

■PIN CONFIGURAITON

BEE-45919-000-00

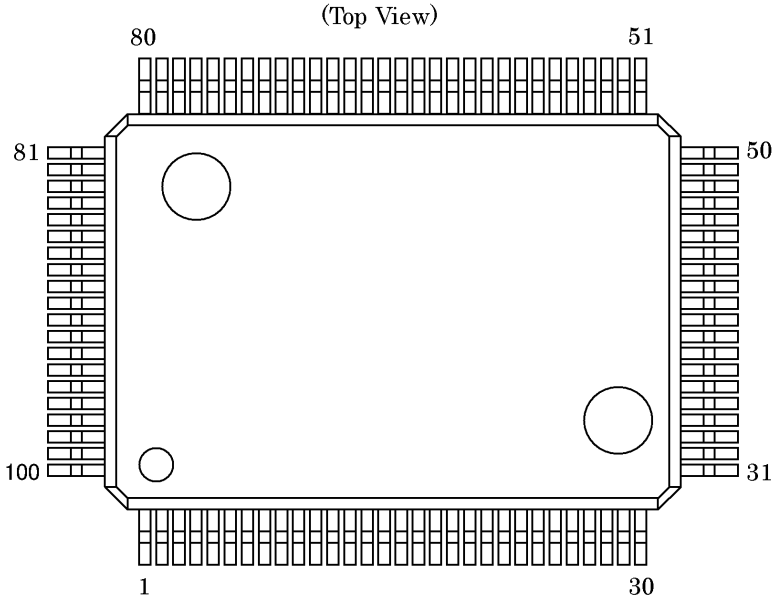

No.	SYMBOL	No.	SYMBOL	No.	SYMBOL	No.	SYMBOL
1	ROUT	26	DCCAP_RS	51	DCR_IN	76	GND
2	COUT	27	L3IN	52	DCR_OUT	77	LSCIN
3	LSOUT	28	DCCAP_LS	53	GND	78	RSCIN
4	RSOUT	29	R3IN	54	DCL_IN	79	LBCIN
5	LBOUT	30	DCCAP_C	55	DCL_OUT	80	RBCIN
6	RBOUT	31	L4IN	56	GND	81	GND
7	SWOUT	32	DCCAP_R	57	REC_B1R	82	LAIN
8	GND	33	R4IN	58	REC_B1L	83	RAIN
9	FIL_BL2	34	DCCAP_L	59	REC_A4R	84	CAIN
10	FIL_BL1	35	L5IN	60	REC_A4L	85	LSAIN
11	FIL_TL	36	GND	61	REC_A3R	86	RSAIN
12	TCAP	37	R5IN	62	REC_A3L	87	LBAIN
13	FIL_BR2	38	GND	63	REC_A2R	88	RBAIN
14	FIL_BR1	39	L6IN	64	REC_A2L	89	SWAIN
15	FIL_TR	40	L9IN	65	REC_A1R	90	GND
16	V^+	41	R6IN	66	REC_A1L	91	LBIN
17	ADR	42	R9IN	67	VDDOUT	92	RBIN
18	V^-	43	L7IN	68	DATA	93	CBIN
19	L1IN	44	L10IN	69	CLOCK	94	LSBIN
20	DCCAP_SW	45	R7IN	70	LATCH	95	RSBIN
21	R1IN	46	R10IN	71	MUTE	96	LBBIN
22	DCCAP_RB	47	L8IN	72	FL+	97	RBBIN
23	L2IN	48	L11IN	73	FL-	98	SWBIN
24	DCCAP_LB	49	R8IN	74	FR+	99	GND
25	R2IN	50	R11IN	75	FR-	100	LOUT

■FUNCTIONAL DESCRIPTION

BGE-45919-000-00

(1) CONTROL DATA

NJW1197 control data is constructed with 16bits.

MSB LSB

D15	D14	D13	D12	D11	D10	D9	D8	D7	D6	D5	D4	D3	D2	D1	D0
Data								Select Address				Chip Address			

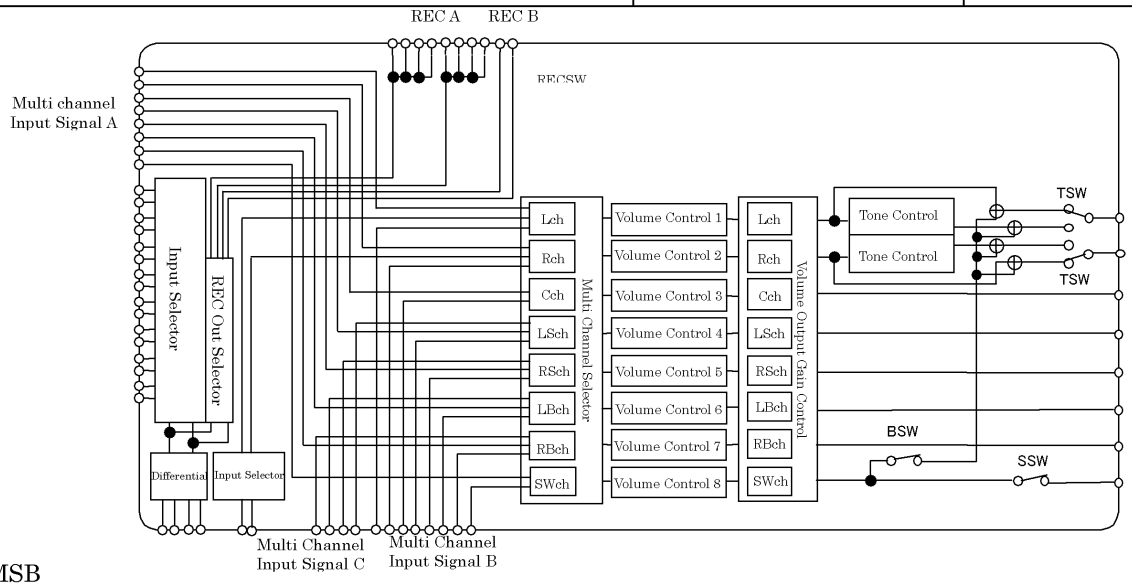

MSB LSB

D15	D14	D13	D12	D11	D10	D9	D8	D7	D6	D5	D4	D3	D2	D1	D0
L channel Volume Control								0	0	0	0	*	*	*	*
R channel Volume Control								0	0	0	1	*	*	*	*
C channel Volume Control								0	0	1	0	*	*	*	*
LS channel Volume Control								0	0	1	1	*	*	*	*
RS channel Volume Control								0	1	0	0	*	*	*	*
LB channel Volume Control								0	1	0	1	*	*	*	*
RB channel Volume Control								0	1	1	0	*	*	*	*
SW channel Volume Control								0	1	1	1	*	*	*	*
Input Selector Gain Control			Input Selector				SSW	1	0	0	0	*	*	*	*
TC/B	Tone Control Treble				TSW	BSW	*	1	0	0	1	*	*	*	*
BC/B	Tone Control Bass				*	*	*	1	0	1	0	*	*	*	*
REC B Selector				Input Selector				1	0	1	1	*	*	*	*
SWch Volume Output Gain Control		REC B1	REC A4	REC A3	REC A2	REC A1		1	1	0	0	*	*	*	*
L, Rch Volume Output Gain Control		Cch, Volume Output Gain Control			*	*		1	1	0	1	*	*	*	*
LS, RSch Volume Output Gain Control		LB, RBch Volume Output Gain Control			SWch Selector			1	1	1	0	*	*	*	*
L, Rch Selector		Cch Selector		LS, RSch Selector		LB, RBch Selector		1	1	1	1	*	*	*	*

*: Don't Care

* Chip address is set by chip address select terminal (ADR) status.

Chip Address Select Terminal (ADR: 17pin)	Chip Address			
	D3	D2	D1	D0
Low	0	1	0	0
High	0	1	0	1

* The mute function can be controlled externally. If the Mute control terminal (71pin) is switched to High, Multi-Channel outputs are muted immediately (hardware mute).

External mute control terminal (MUTE: 71pin)	Setting
Low	Mute cancellation
High	Mute

ST232

5V POWERED MULTI-CHANNEL RS-232 DRIVERS AND RECEIVERS

- SUPPLY VOLTAGE RANGE: 4.5 TO 5.5V
- SUPPLY CURRENT NO LOAD (TYP): 5mA
- TRANSMITTER OUTPUT VOLTAGE SWING (TYP): ±7.8V
- CONTROLLED OUTPUT SLEW RATE
- RECEIVER INPUT VOLTAGE RANGE: ±30V
- DATA RATE (TYP): 220Kbps
- OPERATING TEMPERATURE RANGE: -40 TO 85 °C, 0 TO 70 °C
- COMPATIBLE WITH MAX232 AND MAX202

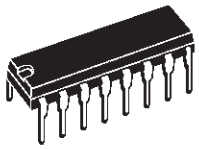

N
(Plastic Package)

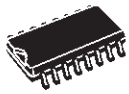

D
(Micro Package)

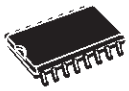

W
(Micro Package Large)

T
(TSSOP Package)

DESCRIPTION

The ST232 is a 2 driver, 2 receiver device following EIA/TIA-232 and V.28 communication standard. It is particularly suitable for applications where ±12V is not available. The ST232 uses a single 5V power supply and only four external capacitors (0.1µF). Typical applications are in: Portable Computers, Low Power Modems, Interfaces Translation, Battery Powered RS-232 System, Multi-Drop RS-232 Networks.

ORDER CODES

Type	Temperature Range	Package	Comments
ST232CN	0 to 70 °C	DIP-16	25 parts per tube / 40 tube per box
ST232BN	-40 to 85 °C	DIP-16	25 parts per tube / 40 tube per box
ST232CD	0 to 70 °C	SO-16 (Tube)	50 parts per tube / 20 tube per box
ST232BD	-40 to 85 °C	SO-16 (Tube)	50 parts per tube / 20 tube per box
ST232CDR	0 to 70 °C	SO-16 (Tape & Reel)	2500 parts per reel
ST232BDR	-40 to 85 °C	SO-16 (Tape & Reel)	2500 parts per reel
ST232CW	0 to 70 °C	SO-16 Large (Tube)	49 parts per tube / 25 tube per box
ST232BW	-40 to 85 °C	SO-16 Large (Tube)	49 parts per tube / 25 tube per box
ST232CWR	0 to 70 °C	SO-16 Large (Tape & Reel)	1000 parts per reel
ST232BWR	-40 to 85 °C	SO-16 Large (Tape & Reel)	1000 parts per reel
ST232CT	0 to 70 °C	TSSOP16 (Tube)	only for samples
ST232BT	-40 to 85 °C	TSSOP16 (Tube)	only for samples
ST232CTR	0 to 70 °C	TSSOP16 (Tape & Reel)	2500 parts per reel
ST232BTR	-40 to 85 °C	TSSOP16 (Tape & Reel)	2500 parts per reel

ST232

PIN CONFIGURATION

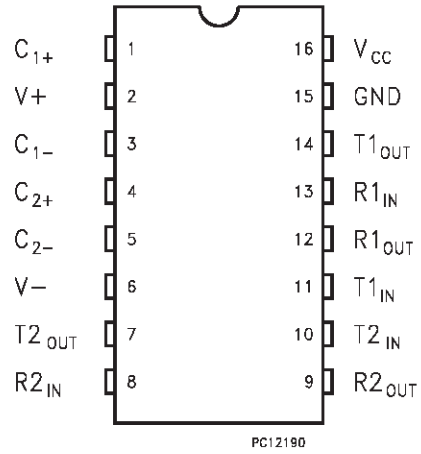

PIN DESCRIPTION

PIN No	SYMBOL	NAME AND FUNCTION
1	C_1+	Positive Terminal for the first Charge Pump Capacitor
2	V+	Doubled Voltage Terminal
3	C_1-	Negative Terminal for the first Charge Pump Capacitor
4	C_2+	Positive Terminal for the second Charge Pump Capacitor
5	C_2-	Negative Terminal for the second Charge Pump Capacitor
6	V-	Inverted Voltage Terminal
7	$T2_{OUT}$	Second Transmitter Output Voltage
8	$R2_{IN}$	Second Receiver Input Voltage
9	$R2_{OUT}$	Second Receiver Output Voltage
10	$T2_{IN}$	Second Transmitter Input Voltage
11	$T1_{IN}$	First Transmitter Input Voltage
12	$R1_{OUT}$	First Receiver Output Voltage
13	$R1_{IN}$	First Receiver Input Voltage
14	$T1_{OUT}$	First Transmitter Output Voltage
15	GND	Ground
16	V_{CC}	Supply Voltage

ABSOLUTE MAXIMUM RATINGS (Note 1)

Symbol	Parameter	Value	Unit
V_{CC}	Supply Voltage	-0.3 to 6	V
T_{IN}	Transmitter Input Voltage Range	-0.3 to (V_{CC} + 0.3)	V
R_{IN}	Receiver Input Voltage Range	±30	V
T_{OUT}	Transmitter Output Voltage Range	(V+ + 0.3) to (V- - 0.3)	V
R_{OUT}	Receiver Output Voltage Range	-0.3 to (V_{CC} + 0.3)	V
T_{SCTOUT}	Short Circuit Duration on T_{OUT}	infinite	
T_{stg}	Storage Temperature Range	-65 to +150	°C

Absolute Maximum Ratings are those values beyond which damage to the device may occur. Functional operation under these condition is not implied.
Note1: No external supply can be applied to V+ terminal and V- terminal.

M24C64
M24C32

64Kbit and 32Kbit Serial I²C Bus EEPROM

FEATURES SUMMARY

- Two-Wire I^2C Serial Interface
  Supports 400kHz Protocol
- Single Supply Voltage:
  - 4.5 to 5.5V for M24Cxx
  - 2.5 to 5.5V for M24Cxx-W
  - 1.8 to 5.5V for M24Cxx-R
- Write Control Input
- BYTE and PAGE WRITE (up to 32 Bytes)
- RANDOM and SEQUENTIAL READ Modes
- Self-Timed Programming Cycle
- Automatic Address Incrementing
- Enhanced ESD/Latch-Up Protection
- More than 1 Million Erase/Write Cycles
- More than 40-Year Data Retention

Table 1. Product List

Reference	Part Number
M24C64	M24C64
	M24C64-W
	M24C64-R
M24C32	M24C32
	M24C32-W
	M24C32-R

Figure 1. Packages

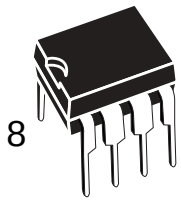

PDIP8 (BN)

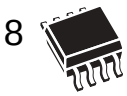

SO8 (MN)
150 mil width

TSSOP8 (DW)
169 mil width

UFDFPN8 (MB)
2x3mm² (MLP)

M24C64, M24C32

SUMMARY DESCRIPTION

These I^2C-compatible electrically erasable programmable memory (EEPROM) devices are organized as 8192 x 8 bits (M24C64) and 4096 x 8 bits (M24C32).

Figure 2. Logic Diagram

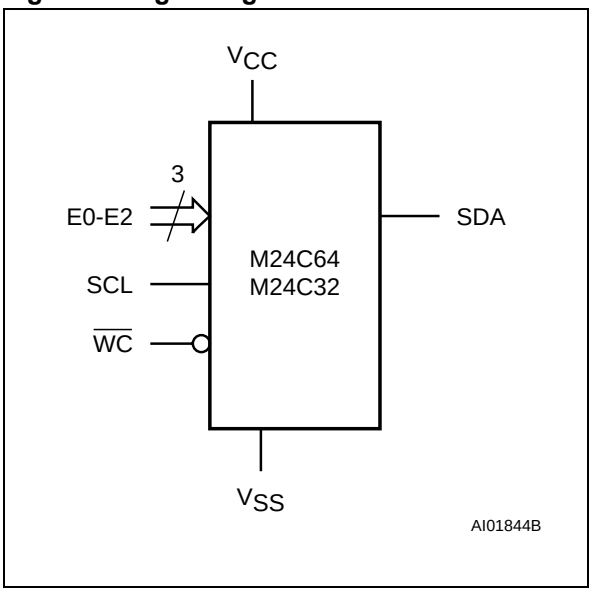

I^2C uses a two-wire serial interface, comprising a bi-directional data line and a clock line. The devices carry a built-in 4-bit Device Type Identifier code (1010) in accordance with the I^2C bus definition.

The device behaves as a slave in the I^2C protocol, with all memory operations synchronized by the serial clock. Read and Write operations are initiated by a Start condition, generated by the bus master. The Start condition is followed by a Device Select Code and Read/Write bit (RW) (as described in Table 3.), terminated by an acknowledge bit.

When writing data to the memory, the device inserts an acknowledge bit during the 9th bit time, following the bus master's 8-bit transmission. When data is read by the bus master, the bus master acknowledges the receipt of the data byte in the same way. Data transfers are terminated by a Stop condition after an Ack for Write, and after a NoAck for Read.

Table 2. Signal Names

E0, E1, E2	Chip Enable
SDA	Serial Data
SCL	Serial Clock
$\overline{WC}$	Write Control
V_{CC}	Supply Voltage
V_{SS}	Ground

Power On Reset: V_{CC} Lock-Out Write Protect

In order to prevent data corruption and inadvertent Write operations during Power-up, a Power On Reset (POR) circuit is included. At Power-up, the internal reset is held active until V_{CC} has reached the Power On Reset (POR) threshold voltage, and all operations are disabled – the device will not respond to any command. In the same way, when V_{CC} drops from the operating voltage, below the Power On Reset (POR) threshold voltage, all operations are disabled and the device will not respond to any command.

A stable and valid V_{CC} (as defined in Table 9. and Table 10.) must be applied before applying any logic signal.

Figure 3. DIP, SO, TSSOP and UFDFPN Connections

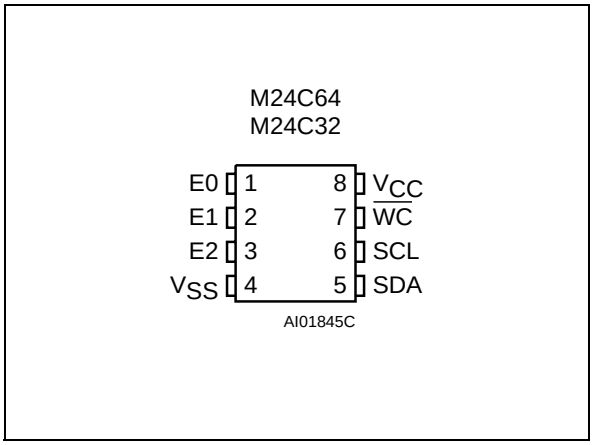

Note: See PACKAGE MECHANICAL section for package dimensions, and how to identify pin-1.

KEC

SEMICONDUCTOR
TECHNICAL DATA

KIC7SZ08FU
SILICON MONOLITHIC CMOS
DIGITAL INTEGRATED CIRCUIT

2 INPUT AND GATE

FEATURES

- High Output Drive : ±24mA (Typ.)
  @V_{CC}=3V
- Super High Speed Operation : t_{PD}=2.7ns(Typ.)
  @V_{CC}=5V, 50pF
- Operation Voltage Range : $V_{CC(opr)}$=1.8~5.5V.
- Supply Voltage Data Retention : V_{CC}=1.5~5.5V.
- 5V Tolerant Function

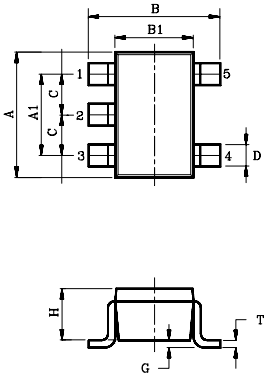

DIM	MILLIMETERS
A	2.00± 0.20
A1	1.3± 0.1
B	2.1± 0.1
B1	1.25± 0.1
C	0.65
D	0.2+0.10/−0.05
G	0~0.1
H	0.9± 0.1
T	0.15+0.1/−0.05

USV

MAXIMUM RATINGS

CHARACTERISTIC	SYMBOL	RATING	UNIT
Supply Voltage Range	V_{CC}	-0.5~6	V
DC Input Voltage	V_{IN}	-0.5~6	V
DC Output Voltage	V_{OUT}	-0.5~6	V
Input Diode Current	I_{IK}	±20	mA
Output Diode Current	I_{OK}	±20	mA
DC Output Current	I_{OUT}	±50	mA
DC V_{CC}/Ground Current	I_{CC}	±50	mA
Power Dissipation	P_D	200	mW
Storage Temperature	T_{stg}	-65~150	℃
Lead Temperature (10s)	T_L	260	℃

MARKING

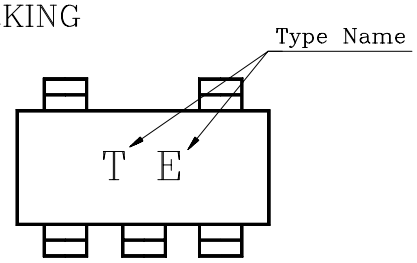

PIN CONNECTION(TOP VIEW)

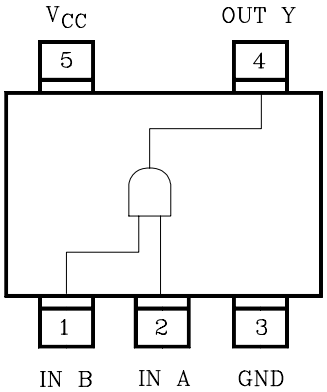

JRC **NJM2845/46**

LOW DROPOUT VOLTAGE REGULATOR

■ GENERAL DESCRIPTION

The NJM2845 is low dropout voltage regulator. Advanced Bipolar technology achieves low noise, high ripple rejection and low quiescent current.

NJM2845 is 3 terminal type and NJM2846 is ON/OFF control built in type. These product can be selected according to the applications.

■ PACKAGE OUTLINE

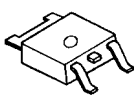

NJM2845DL1

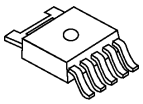

NJM2846DL3

■ FEATURES

- High Ripple Rejection 75dB typ. (f=1kHz,3V Version)
- Output Noise Voltage Vno=45μVrms typ. (Vo=3V Version)
- Output capacitor with 2.2μF ceramic capacitor (Vo≥2.6V)
- Output Current Io(max.)=800mA
- High Precision Output Vo ±1.0%
- Low Dropout Voltage 0.18V typ. (Io=500mA)
- ON/OFF Control (NJM2846)
- Internal Short Circuit Current Limit
- Internal Thermal Overload Protection
- Bipolar Technology
- Package Outline TO-252-3 (NJM2845DL1), TO-252-5 (NJM2846DL3)

■ PIN CONFIGURATION

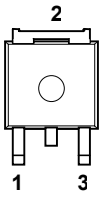

1.V_{IN}
2.GND
3.V_{OUT}

NJM2845DL1

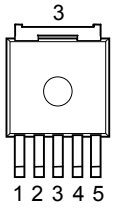

1.CONTROL
2.V_{IN}
3.GND
4.Vo
5.NC

NJM2846DL3

■ EQUIVALENT CIRCUIT

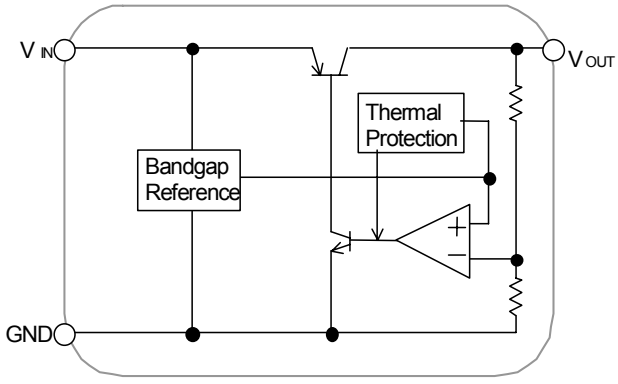

NJM2845DL1

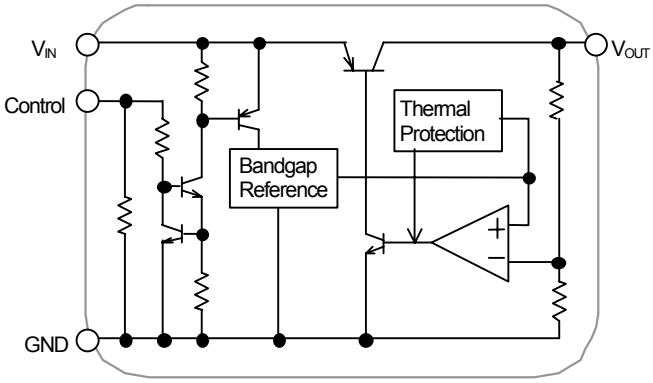

NJM2846DL3

TOSHIBA TC74VHC157F/FN/FT

TOSHIBA CMOS DIGITAL INTEGRATED CIRCUIT SILICON MONOLITHIC

TC74VHC157F, TC74VHC157FN, TC74VHC157FT

QUAD 2 - CHANNEL MULTIPLEXER

(Note) The JEDEC SOP (FN) is not available in Japan.

The TC74VHC157 is an advanced high speed CMOS QUAD 2 - CHANNEL MULTIPLEXER fabricated with silicon gate C^2MOS technology.
It achieves the high speed operation similar to equivalent Bipolar Schottky TTL while maintaining the CMOS low power dissipation.
It consists of four 2 - input digital multiplexers with common select and strobe inputs.
When the $\overline{STROBE}$ input is held "H" level, selection of data is inhibited and all the outputs become "L" level.
The SELECT decoding determines whether the A or B inputs get routed to their corresponding Y outputs.
An Input protection circuit ensures that 0 to 5.5V can be applied to the input pins without regard to the supply voltage. This device can be used to interface 5V to 3V systems and on two supply systems such as battery back up. This circuit prevents device destruction due to mismatched supply and input voltages.

FEATURES :

- High Speed ····· t_{pd} = 4.1ns(typ.) at V_{CC} = 5V
- Low Power Dissipation ····· I_{CC} = 4μA(Max.) at Ta = 25°C
- High Noise Immunity ····· $V_{NIH} = V_{NIL}$ = 28% V_{CC} (Min.)
- Power Down Protection is provided on all inputs.
- Balanced Propagation Delays ····· $t_{pLH} \simeq t_{pHL}$
- Wide Operating Voltage Range ···· V_{CC} (opr) = 2V ~ 5.5V
- Low Noise ····· V_{OLP} = 0.8V (Max.)
- Pin and Function Compatible with 74ALS157

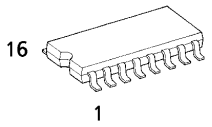

F (SOP16-P-300-1.27)
Weight : 0.18g (Typ.)

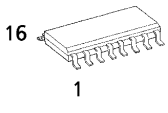

FN (SOL16-P-150-1.27)
Weight : 0.13g (Typ.)

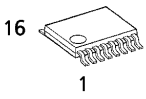

FT (TSSOP16-P-0044-0.65)
Weight : 0.06g (Typ.)

PIN ASSIGNMENT

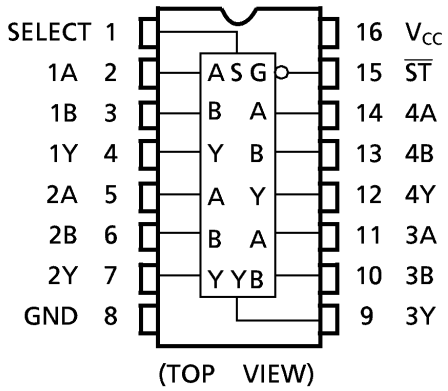

(TOP VIEW)

TRUTH TABLE

INPUTS				OUTPUT
$\overline{ST}$	SELECT	A	B	
H	X	X	X	L
L	L	L	X	L
L	L	H	X	H
L	H	X	L	L
L	H	X	H	H

X : Don't Care

IEC LOGIC SYMBOL

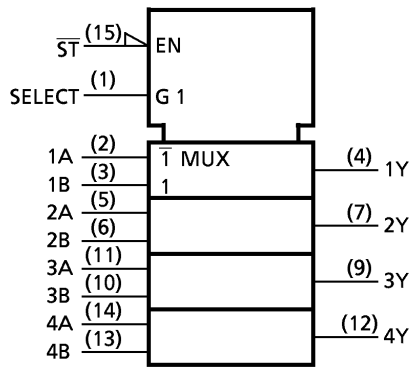

980910EBA2

● TOSHIBA is continually working to improve the quality and the reliability of its products. Nevertheless, semiconductor devices in general can malfunction or fail due to their inherent electrical sensitivity and vulnerability to physical stress. It is the responsibility of the buyer, when utilizing TOSHIBA products, to observe standards of safety, and to avoid situations in which a malfunction or failure of a TOSHIBA product could cause loss of human life, bodily injury or damage to property. In developing your designs, please ensure that TOSHIBA products are used within specified operating ranges as set forth in the most recent products specifications. Also, please keep in mind the precautions and conditions set forth in the TOSHIBA Semiconductor Reliability Handbook.

SYSTEM DIAGRAM

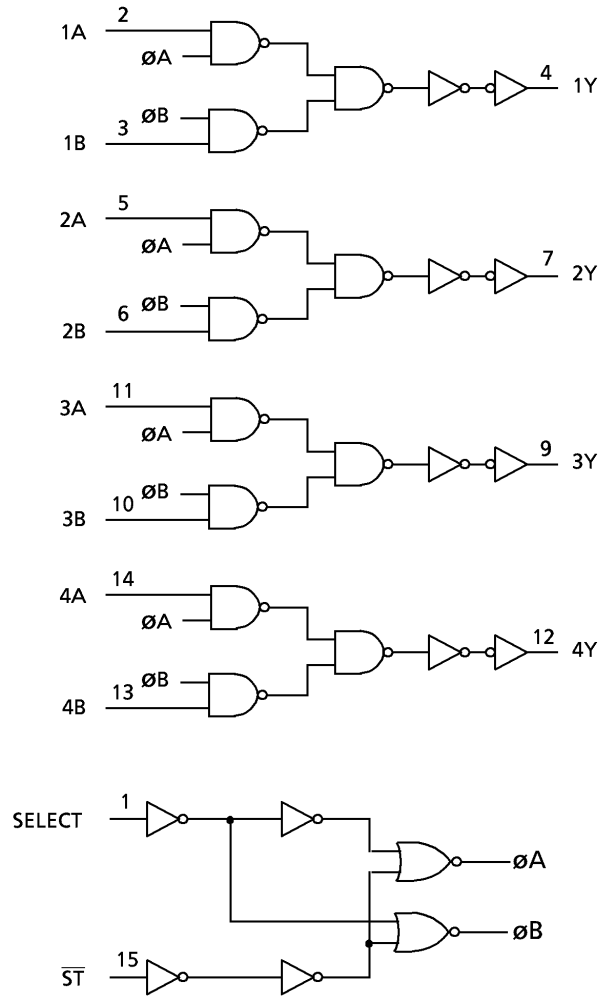

● The products described in this document are subject to the foreign exchange and foreign trade laws.
● The information contained herein is presented only as a guide for the applications of our products. No responsibility is assumed by TOSHIBA CORPORATION for any infringements of intellectual property or other rights of the third parties which may result from its use. No license is granted by implication or otherwise under any intellectual property or other rights of TOSHIBA CORPORATION or others.
● The information contained herein is subject to change without notice.

TOSHIBA TC74LCX541F/FW/FT

TOSHIBA CMOS DIGITAL INTEGRATED CIRCUIT SILICON MONOLITHIC

TC74LCX541F, TC74LCX541FW, TC74LCX541FT

LOW VOLTAGE OCTAL BUS BUFFER
WITH 5V TOLERANT INPUTS AND OUTPUTS

The TC74LCX541 is a high performance CMOS OCTAL BUS BUFFER. Designed for use in 3.3 Volt systems, it achieves high speed operation while maintaining the CMOS low power dissipation.
The device is designed for low-voltage (3.3V) V_{CC} applications, but it could be used to interface to 5V supply environment for both inputs and outputs.
The 74LCX541 is a non-inverting 3-state buffer having two active-low output enables. When either $\overline{OE}1$ or $\overline{OE}2$ are high, the terminal outputs are in the high-impedance state. This device is designed to be used with 3-state memory address drivers, etc.
All inputs are equipped with protection circuits against static discharge.

(Note) The JEDEC SOP (FW) is not available in Japan.

TC74LCX541F

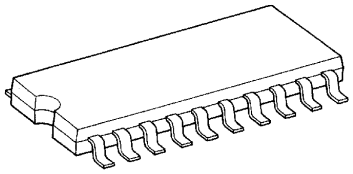

SOP20-P-300-1.27

TC74LCX541FW

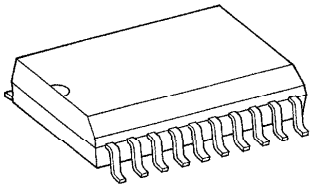

SOL20-P-300-1.27

TC74LCX541FT

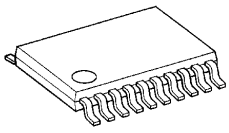

TSSOP20-P-0044-0.65

Weight
SOP20-P-300-1.27 : 0.22g (Typ.)
SOL20-P-300-1.27 : 0.46g (Typ.)
TSSOP20-P-0044-0.65 : 0.08g (Typ.)

FEATURES

- Low voltage operation : $V_{CC} = 2.0 \sim 3.6V$
- High speed operation : t_{pd} = 6.5ns (Max.) ($V_{CC} = 3.0 \sim 3.6V$)
- Output current : $|I_{OH}| / I_{OL}$ = 24mA (Min.) ($V_{CC} = 3.0V$)
- Latch-up performance : ±500mA
- Available in JEDEC SOP, EIAJ SOP and TSSOP
- Power down protection is provided on all inputs and outputs.
- Pin and function compatible with the 74 series (74AC / VHC / HC / F / ALS / LS etc.) 541 type.

961001EBA2

● TOSHIBA is continually working to improve the quality and the reliability of its products. Nevertheless, semiconductor devices in general can malfunction or fail due to their inherent electrical sensitivity and vulnerability to physical stress. It is the responsibility of the buyer, when utilizing TOSHIBA products, to observe standards of safety, and to avoid situations in which a malfunction or failure of a TOSHIBA product could cause loss of human life, bodily injury or damage to property. In developing your designs, please ensure that TOSHIBA products are used within specified operating ranges as set forth in the most recent products specifications. Also, please keep in mind the precautions and conditions set forth in the TOSHIBA Semiconductor Reliability Handbook.

PIN ASSIGNMENT

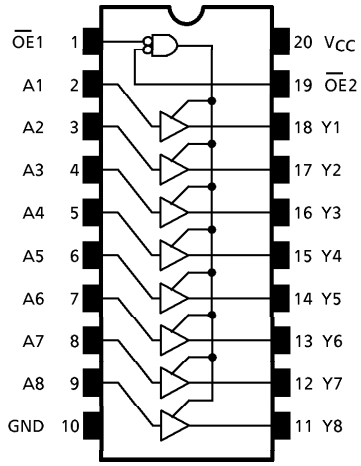

(TOP VIEW)

IEC LOGIC SYMBOL

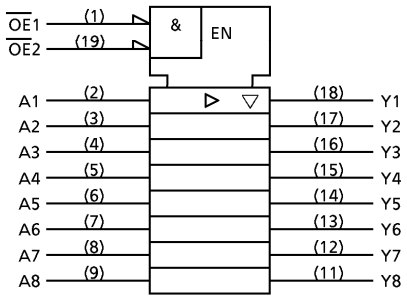

TRUTH TABLE

INPUTS			OUTPUTS
$\overline{OE}1$	$\overline{OE}2$	An	
H	X	X	Z
X	H	X	Z
L	L	H	H
L	L	L	L

X : Don't Care
Z : High Impedance

MAXIMUM RATINGS

PARAMETER	SYMBOL	RATING	UNIT
Supply Voltage Range	V_{CC}	−0.5~7.0	V
DC Input Voltage	V_{IN}	−0.5~7.0	V
DC Output Voltage	V_{OUT}	−0.5~7.0 (Note 1)	V
		−0.5~V_{CC}+0.5 (Note 2)	
Input Diode Current	I_{IK}	−50	mA
Output Diode Current	I_{OK}	±50 (Note 3)	mA
DC Output Current	I_{OUT}	±50	mA
Power Dissipation	P_D	180	mW
DC V_{CC}/Ground Current	I_{CC} / I_{GND}	±100	mA
Storage Temperature	T_{stg}	−65~150	°C

(Note 1) Output in Off-State
(Note 2) High or Low State. I_{OUT} absolute maximum rating must be observed.
(Note 3) V_{OUT}<GND, V_{OUT}>V_{CC}

961001EBA2'

- The products described in this document are subject to foreign exchange and foreign trade control laws.
- The information contained herein is presented only as a guide for the applications of our products. No responsibility is assumed by TOSHIBA CORPORATION for any infringements of intellectual property or other rights of the third parties which may result from its use. No license is granted by implication or otherwise under any intellectual property or other rights of TOSHIBA CORPORATION or others.
- The information contained herein is subject to change without notice.

TOSHIBA TC74VHCT14AF/AFN/AFT

TOSHIBA CMOS DIGITAL INTEGRATED CIRCUIT SILICON MONOLITHIC

TC74VHCT14AF, TC74VHCT14AFN, TC74VHCT14AFT

HEX SCHMITT INVERTER

The TC74VHCT14A is an advanced high speed CMOS SCHMITT INVERTER fabricated with silicon gate C2MOS technology.
It achieves the high speed operation similar to equivalent Bipolar Schottky TTL while maintaining the CMOS low power dissipation.
Pin configuration and function are the same as the TC74VHC04 but the inputs have hysteresis and with its schmitt trigger function, the TC74VHC14 can be used as a line receivers which will receive slow input signals.
The input voltage are compatible with TTL output voltage.
This device may be used as a level converter for interfacing 3.3V to 5V system.
Input protection and output circuit ensure that 0 to 5.5V can be applied to the input and output*1 pins without regard to the supply voltage. These structure prevents device destruction due to mismatched supply and input / output voltages such as battery back up, hot board insertion, etc.
*1: Vcc = 0V

FEATURES:
- High Speed ..... t_{pd} = 5.0ns (typ.) at V_{CC} = 5V
- Low Power Dissipation ..... I_{CC} = 2μA(Max.) at Ta = 25°C
- Compatible with TTL outputs .... V_{IL} = 0.8V (Max.), V_{IH} = 2.0V (Min.)
- Power Down Protection is provided on all inputs and outputs.
- Balanced Propagation Delays ..... $t_{pLH} \simeq t_{pHL}$
- Low Noise ..... V_{OLP} = 0.8V (Max.)
- Pin and Function Compatible with the 74 series (74AC / HC / F / ALS / LS etc.) 14 type.

(Note) The JEDEC SOP (FN) is not available in Japan.

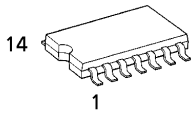

F (SOP14-P-300-1.27)
Weight : 0.18g (Typ.)

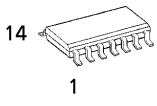

FN (SOL14-P-150-1.27)
Weight : 0.12g (Typ.)

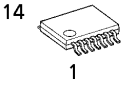

FT (TSSOP14-P-0044-0.65)
Weight : 0.06g (Typ.)

PIN ASSIGNMENT

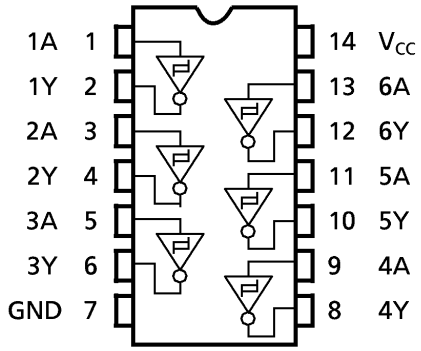

SYSTEM DIAGRAM, WAVEFORM

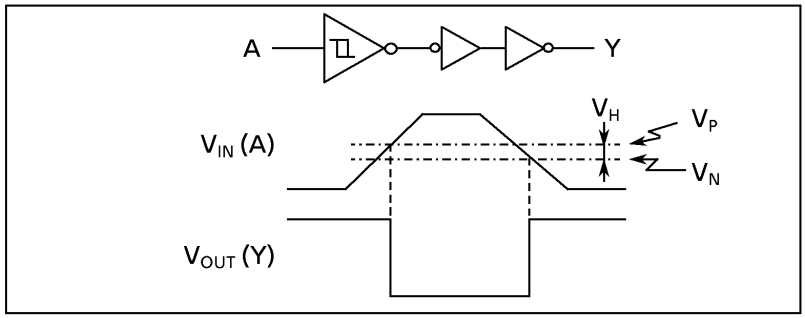

IEC LOGIC SYMBOL

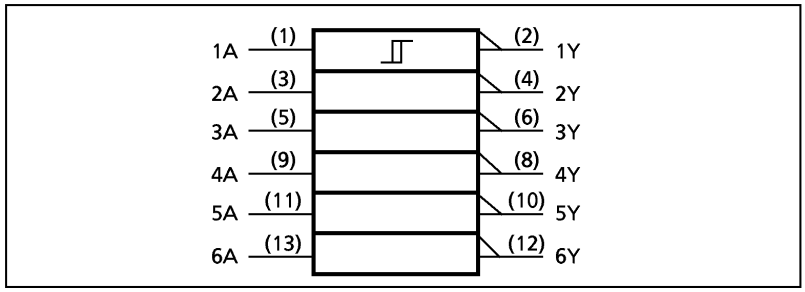

TRUTH TABLE

A	Y
L	H
H	L

980910EBA2

● TOSHIBA is continually working to improve the quality and the reliability of its products. Nevertheless, semiconductor devices in general can malfunction or fail due to their inherent electrical sensitivity and vulnerability to physical stress. It is the responsibility of the buyer, when utilizing TOSHIBA products, to observe standards of safety, and to avoid situations in which a malfunction or failure of a TOSHIBA product could cause loss of human life, bodily injury or damage to property. In developing your designs, please ensure that TOSHIBA products are used within specified operating ranges as set forth in the most recent products specifications. Also, please keep in mind the precautions and conditions set forth in the TOSHIBA Semiconductor Reliability Handbook.

SGS-THOMSON MICROELECTRONICS

M54HCU04
M74HCU04

HEX INVERTER (SINGLE STAGE)

- HIGH SPEED
  t_{PD} = 5 ns (TYP.) AT V_{CC} = 5 V
- LOW POWER DISSIPATION
  I_{CC} = 1 µA (MAX.) AT T_A = 25 °C
- HIGH NOISE IMMUNITY
  $V_{NIH} = V_{NIL}$ = 10 % V_{CC} (MIN.)
- OUTPUT DRIVE CAPABILITY
  10 LSTTL LOADS
- SYMMETRICAL OUTPUT IMPEDANCE
  $|I_{OH}| = I_{OL}$ = 4 mA (MIN.)
- BALANCED PROPAGATION DELAYS
  $t_{PLH} = t_{PHL}$
- WIDE OPERATING VOLTAGE RANGE
  V_{CC} (OPR) = 2 V TO 6 V
- PIN AND FUNCTION COMPATIBLE WITH 54/74LS04

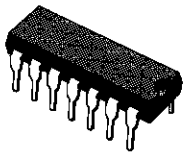

B1R
(Plastic Package)

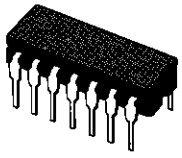

F1R
(Ceramic Package)

M1R
(Micro Package)

C1R
(Chip Carrier)

ORDER CODES :

M54HCU04F1R M74HCU04M1R
M74HCU04B1R M74HCU04C1R

DESCRIPTION

The M54/74HCU04 is a high speed CMOS HEX INVERTER (SINGLE STAGE) fabricated in silicon gate C^2MOS technology. It has the same high speed performance of LSTTL combined with true CMOS low power consumption.

As the intrnal circuit is composed of a single stage inverter, it can be used in crystal oscillator.

All inputs are equipped with circuits against static discharge and transient excess voltage.

INPUT AND OUTPUT EQUIVALENT CIRCUIT

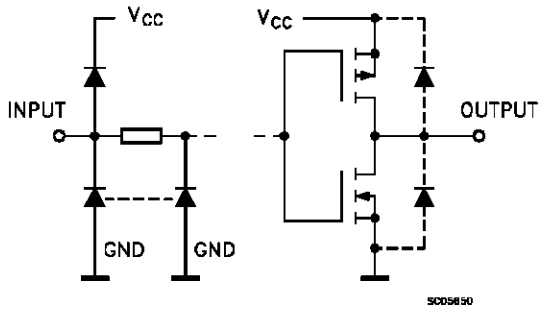

PIN CONNECTIONS (top view)

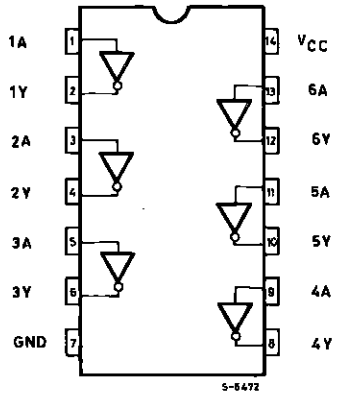

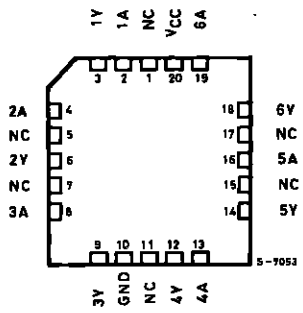

NC =
No Internal
Connection

■ PIN ASSIGNMENT (74HCU04AFN : IC72,76)

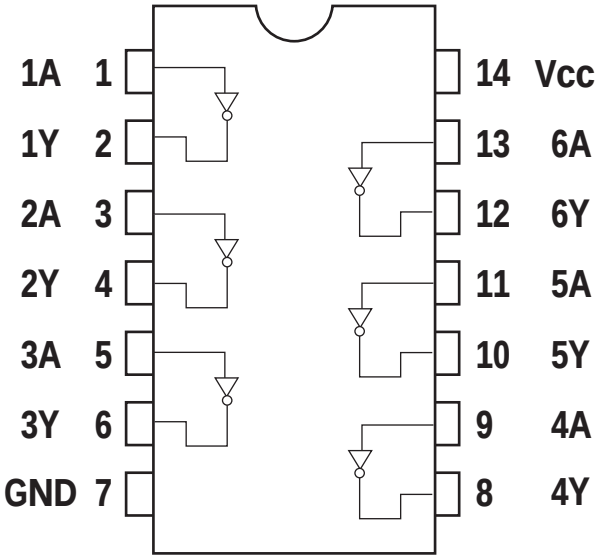

■ LOGIC SYMBOL

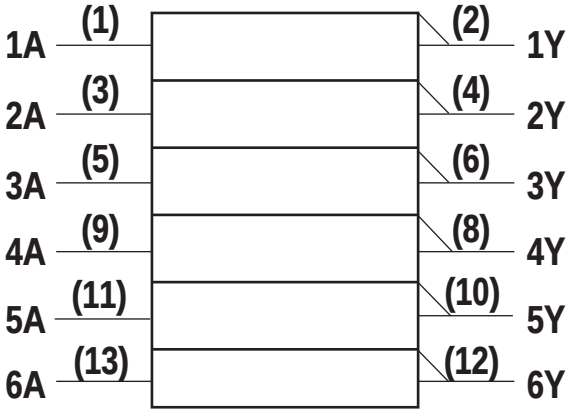

■ TRUTH TABLE

A	Y
L	H
H	L

CMOS 16-Bit Microcontrollers

T5CC1

1. Outline and Features

T5CC1 is a high-speed 16-bit microcontroller designed for the control of various mid- to large-scale equipment.

T5CC1 comes in a 100-pin flat package.

Listed below are the features.

(1) High-speed 16-bit CPU (900/L1 CPU)

- Instruction mnemonics are upward-compatible with TLCS-90/900
- General-purpose registers and register banks
- 16 Mbytes of linear address space
- 16-bit multiplication and division instructions; bit transfer and arithmetic instructions
- Micro DMA: 4-channels (593 ns/2 bytes at 27 MHz)

(2) Minimum instruction execution time: 148 ns (at 27 MHz)

(3) Built-in RAM: 16 Kbytes
Built-in ROM: 256 Kbytes Flash memory
4 Kbytes mask ROM (used for booting)

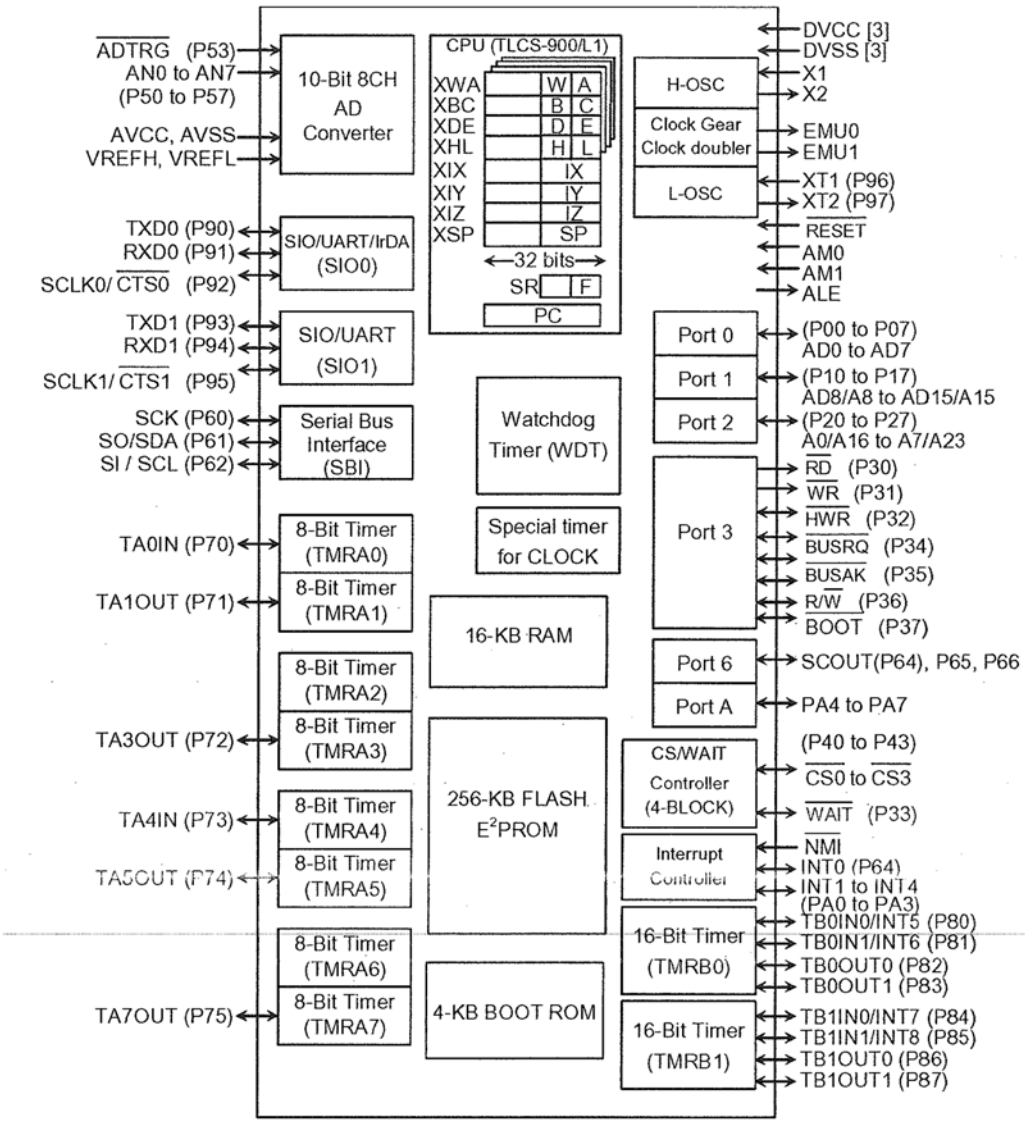

( ): Initial function after reset

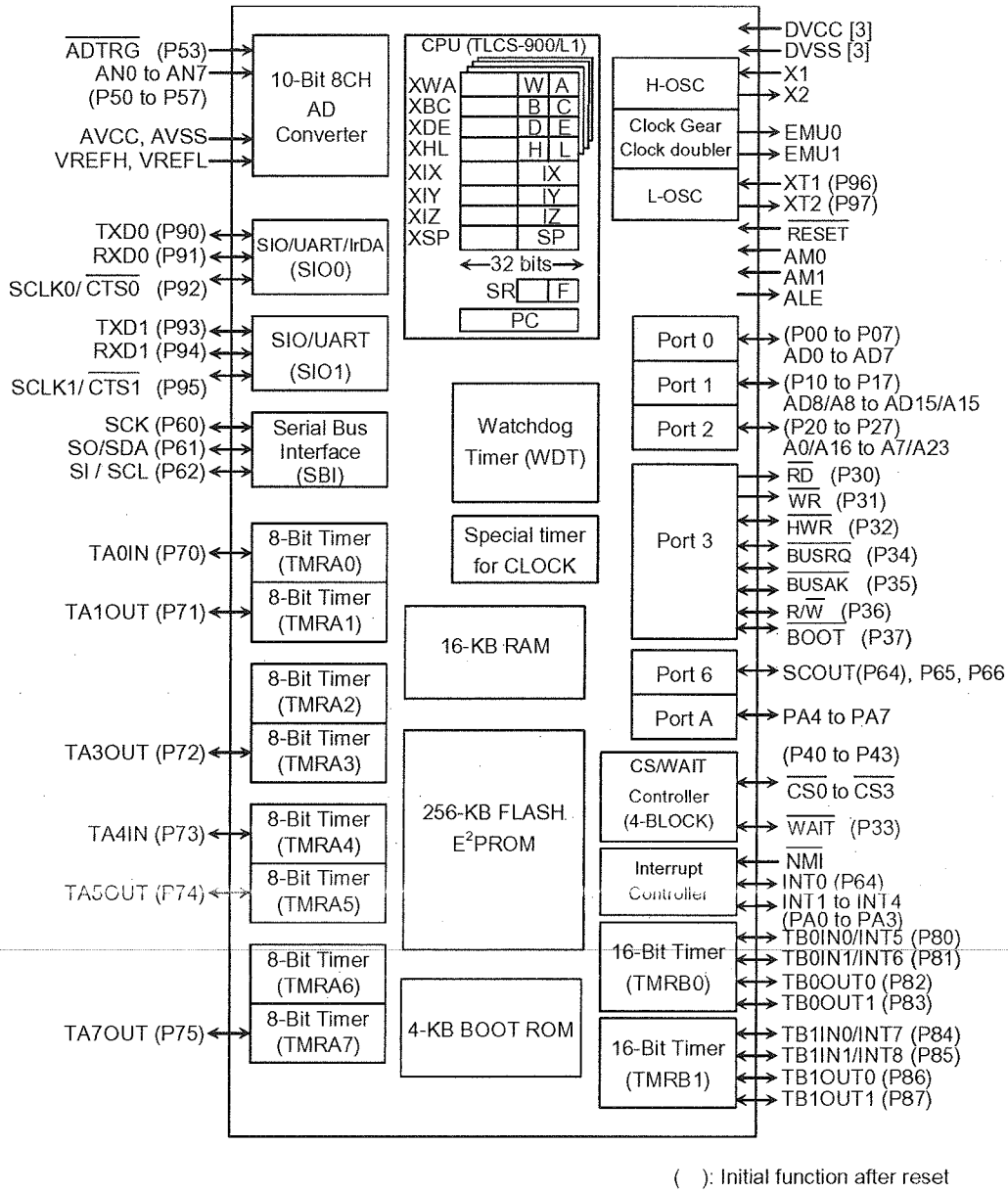

Figure 1.1 T5CC1 Block Diagram

2. Pin Assignment and Pin Functions

The assignment of input/output pins for the T5CC1, their names and functions are as follows:

2.1 Pin Assignment Diagram

Figure 2.1.1 shows the pin assignment of the T5CC1.

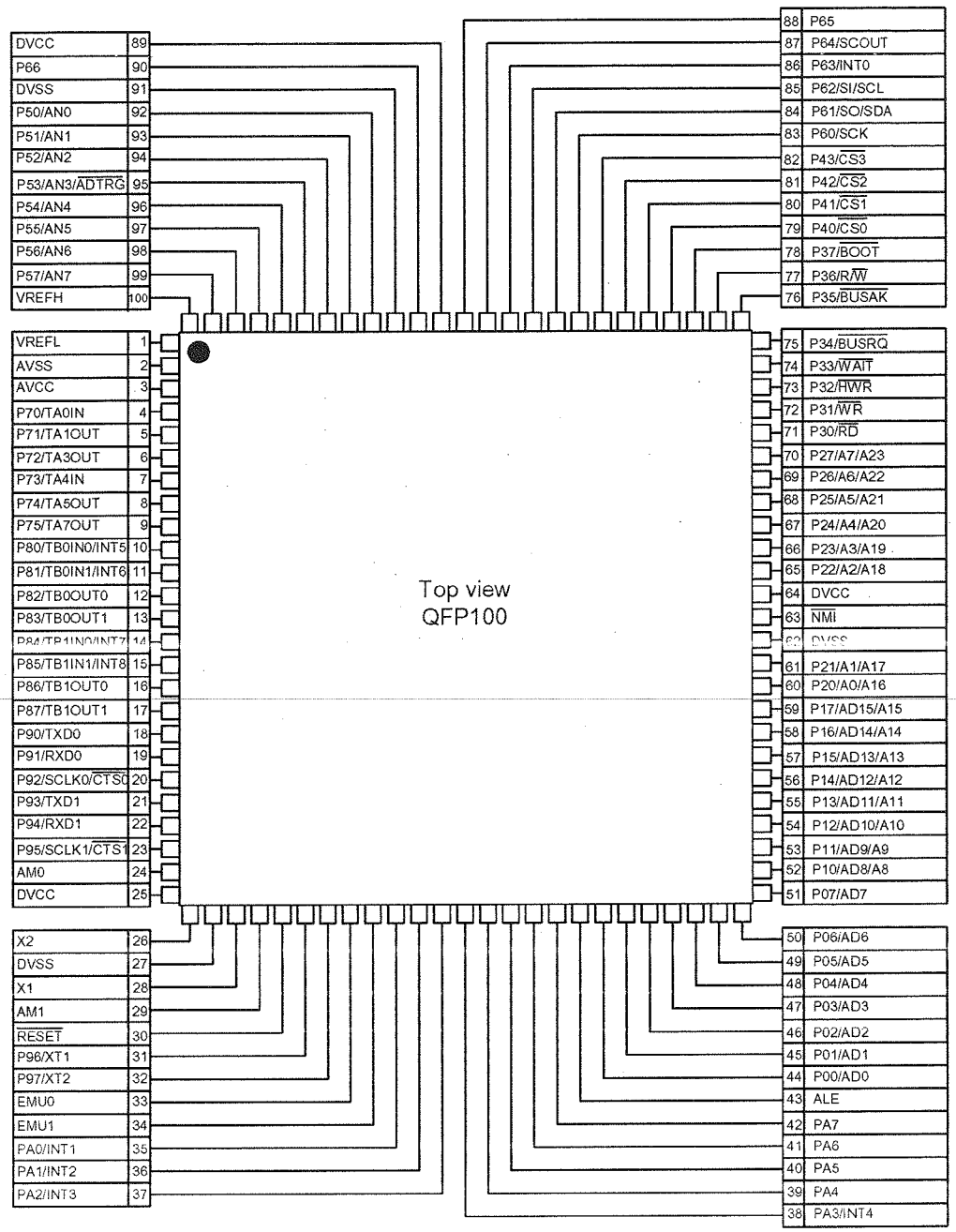

Figure 2.1.1 Pin assignment diagram (100-pin LQFP)

2.2 Pin Names and Functions

The names of the input/output pins and their functions are described below.
Table 2.2.1 Pin names and functions.

Table 2.2.1 Pin names and functions (1/3)

Pin Name	Number of Pins	I/O	Functions
P00~P07	8	I/O	Port 0: I/O port that allows I/O to be selected at the bit level
AD0~AD7		I/O	Address and data (lower): Bits 0 to 7 of address and data bus
P10~P17	8	I/O	Port 1: I/O port that allows I/O to be selected at the bit level
AD8~AD15		I/O	Address and data (upper): Bits 8 to 15 for address and data bus
A8~A15		Output	Address: Bits 8 to 15 of address bus
P20~P27	8	I/O	Port 2: I/O port that allows I/O to be selected at the bit level
A0~A7		Output	Address: Bits 0 to 7 of address bus
A16~A23		Output	Address: Bits 16 to 23 of address bus
P30	1	Output	Port 30: Output port
$\overline{RD}$		Output	Read: Strobe signal for reading external memory This port output RD signal also case of reading internal-area by setting P3 <P30> = 0 and P3FC <P30F> = 1.
P31	1	Output	Port 31: Output port
$\overline{WR}$		Output	Write: Strobe signal for writing data to pins AD0 to AD7
P32	1	I/O	Port 32: I/O port (with pull-up resistor)
$\overline{HWR}$		Output	High Write: Strobe signal for writing data to pins AD8 to AD15
P33	1	I/O	Port 33: I/O port (with pull-up resistor)
$\overline{WAIT}$		Input	Wait: Pin used to request CPU bus wait ((1+N) WAIT mode)
P34	1	I/O	Port 34: I/O port (with pull-up resistor)
BUSRQ		Input	Bus Request: Signal used to request Bus Release
P35	1	I/O	Port 35: I/O port (with pull-up resistor)
$\overline{BUSAK}$		Output	Bus Acknowledge: Signal used to acknowledge Bus Release
P36	1	I/O	Port 36: I/O port (with pull-up resistor)
R/$\overline{W}$		Output	Read/Write: 1 represents Read or Dummy cycle; 0 represents Write cycle.
P37	1	I/O	Port 36: I/O port (with pull-up resistor)
$\overline{BOOT}$		Input	This pin sets single boot mode. When released reset, Single boot mode is started at P37=Low level.
P40	1	I/O	Port 40: I/O port (with pull-up resistor)
$\overline{CS0}$		Output	Chip Select 0: Outputs 0 when address is within specified address area
P41	1	I/O	Port 41: I/O port (with pull-up resistor)
$\overline{CS1}$		Output	Chip Select 1: Outputs 0 if address is within specified address area
P42	1	I/O	Port 42: I/O port (with pull-up resistor)
$\overline{CS2}$		Output	Chip Select 2: Outputs 0 if address is within specified address area
P43	1	I/O	Port 43: I/O port (with pull-up resistor)
$\overline{CS3}$		Output	Chip Select 3: Outputs 0 if address is within specified address area
P50~P57	8	Input	Port 5: Pin used to input port
AN0~AN7		Input	Analog input: Pin used to input to AD converter
$\overline{ADTRG}$		Input	AD Trigger: Signal used to request start of AD converter (Shared with53 pin)

Table 2.2.1 Pin names and functions (2/3)

Pin Name	Number of Pins	I/O	Functions
P60 SCK	1	I/O I/O	Port 60: I/O port Serial bus interface clock in SIO Mode
P61 SO SDA	1	I/O Output I/O	Port 61: I/O port Serial bus interface send data at SIO mode Serial bus interface send/recive data at I^2C bus mode Open-drain output mode by programmable
P62 SI SCL	1	I/O Input I/O	Port 62: I/O port Serial bus interface recive data at SIO mode Serial bus interface clock I/O data at I^2C bus mode Open-drain output mode by programmable
P63 INT0	1	I/O Input	Port 63: I/O port Interrupt Request Pin 0: Interrupt request pin with programmable level / rising edge / falling edge
P64 SCOUT	1	I/O Output	Port 64: I/O port System Clock Output: Outputs f_{FPH} or fs clock.
P65	1	I/O	Port 65 I/O port
P66	1	I/O	Port 66 I/O port
P70 TA0IN	1	I/O Input	Port 70I/O port 8bitt timer 0 input:: Timer 0 input
P71 TA1OUT	1	I/O Output	Port 71I/O port 8-bit timer 1 output: Timer 0 or Timer 1 output
P72 TA3OUT	1	I/O Output	Port 72I/O port 8bit 8-bit timer 3 output: Timer 2 or Timer 3 output
P73 TA4IN	1	I/O Input	Port 73: I/O port 8-bit timer 4 input: Timer 4 input
P74 TA5OUT	1	I/O Output	Port 74: I/O port 8-bit timer 5 output: Timer 4 or Timer 5 output
P75 TA7OUT	1	I/O Output	Port 75: I/O port 88-bit timer 7 output: Timer 6 or Timer 7 output
P80 TB0IN0 INT5	1	I/O Input Input	Port 80: I/O port 16bit timer 0 input 0: 16bit Timer 0 count / capture trigger input Interrupt Request Pin 5: Interrupt request pin with programmable rising edge / falling edge.
P81 TB0IN1 INT6	1	I/O Input Input	Port 81: I/O port 16bit timer 0 input 1: 16bit Timer 0 count / capture trigger input Interrupt Request Pin 6: Interrupt request on rising edge
P82 TB0OUT0	1	I/O Output	Port 82: I/O port 16bit timer 0 output 0: 16bit Timer 0 output
P83 TB0OUT1	1	I/O Output	Port 83: I/O port 16bit timer 0 output 1: 16bit Timer 0 output
P84 TB1IN0 INT7	1	I/O Input Input	Port 84: I/O port 16bit timer 1 input 0: 16bit Timer 1 count / capture trigger input Interrupt Request Pin 7: Interrupt request pin with programmable rising edge / falling edge.
P85 TB1IN1 INT8	1	I/O Input Input	Port 85: I/O port 16bit timer 1 input 1: 16bit Timer 1 count / capture trigger input Interrupt Request Pin 8: Interrupt request on rising edge
P86 TB1OUT0	1	I/O Output	Port 86: I/O port 16bit timer 1 output 0: 16bit Timer 1 output 16bit
P87 TB1OUT1	1	I/O Output	Port 87: I/O port 16bit timer 1 output 1: 16bit Timer 1 output 16bit 16bit

Table 2.2.1 Pin names and functions (3/3)

Pin Name	Number of Pins	I/O	Functions
P90 TXD0	1	I/O Output	Port 90: I/O port Serial Send Data 0 (programmable open-drain)
P91 RXD0	1	I/O Input	Port 91: I/O port Serial Receive Data 0
P92 SCLK0 $\overline{\text{CTS0}}$	1	I/O I/O Input	Port 92: I/O port Serial Clock I/O 0 Serial Data Send Enable 0 (Clear to Send)
P93 TXD1	1	I/O Output	Port 93: I/O port Serial Send Data 1 (programmable open-drain)
P94 RXD1	1	I/O Input	Port 94: I/O port (with pull-up resistor) Serial Receive Data 1
P95 SCLK1 $\overline{\text{CTS1}}$	1	I/O I/O Input	Port 95: I/O port (with pull-up resistor) Serial Clock I/O 1 Serial Data Send Enable 1 (Clear to Send)
P96 XT1	1	I/O Input	Port 96: I/O port (open-drain output) Low-frequency oscillator connection pin
P97 XT2	1	I/O Output	Port 97: I/O port (open-drain output) Low-frequency oscillator connection pin
PA0~PA3 INT1~INT4	4	I/O Input	Ports A0 to A3: I/O ports Interrupt Request Pins 1 to 4: Interrupt request pins with programmable rising edge / falling edge.
PA4~PA7	4	I/O	Ports A4 to A7: I/O ports
ALE	1	Output	Address Latch Enable Can be disabled to reduce noise.
$\overline{\text{NMI}}$	1	Input	Non-Maskable Interrupt Request Pin: Interrupt request pin with programmable falling edge or both edge.
AM0~1	2	Input	Operation mode: Fixed to AM1 = 1, AM0 = 1
EMU0	1	Output	Open pin
EMU1	1	Output	Open pin
$\overline{\text{RESET}}$	1	Input	Reset: initializes T5CC1. (With pull-up resistor)
VREFH	1	Input	Pin for reference voltage input to AD converter (H)
VREFL	1	Input	Pin for reference voltage input to AD converter (L)
AVCC	1		Power supply pin for AD converter
AVSS	1		GND pin for AD converter (0 V)
X1/X2	2	I/O	High-frequency oscillator connection pins
DVCC	3		Power supply pins (All DVCC pins should be connected with the power supply pin.)
DVSS	3		GND pins (0 V) (All DVSS pins should be connected with the power supply pin.)

Note: An external DMA controller cannot access the device's built-in memory or built-in I/O devices using the $\overline{\text{BUSRQ}}$ and $\overline{\text{BUSAK}}$ signal.

JRC **NJM2595**

5-INPUT 3-OUTPUT VIDEO SWITCH

■ GENERAL DESCRIPTION

The **NJM2595** is a 5-input 3-output video switch. Its switches select one from five signals received from VTR,TV,DVD, TV-GAME and others.

The NJM2595 is designed for audio items, such as AV amplifier and others.

■ PACKAGE OUTLINE

NJM2595D **NJM2595M**

■ FEATURES

- 5-input 3-output
- Operating Voltage ±4.0 to ±6.5V
- Operating current ±15mAtyp. at Vcc=±5V
- Crosstalk -65dBtyp.
- Internal 6dB Amplifier
- Internal 75Ω Driver
- Bipolar Technology
- Package Outline DIP16,DMP16

■ PIN CONFIGURATION and BLOCK DIAGRAM

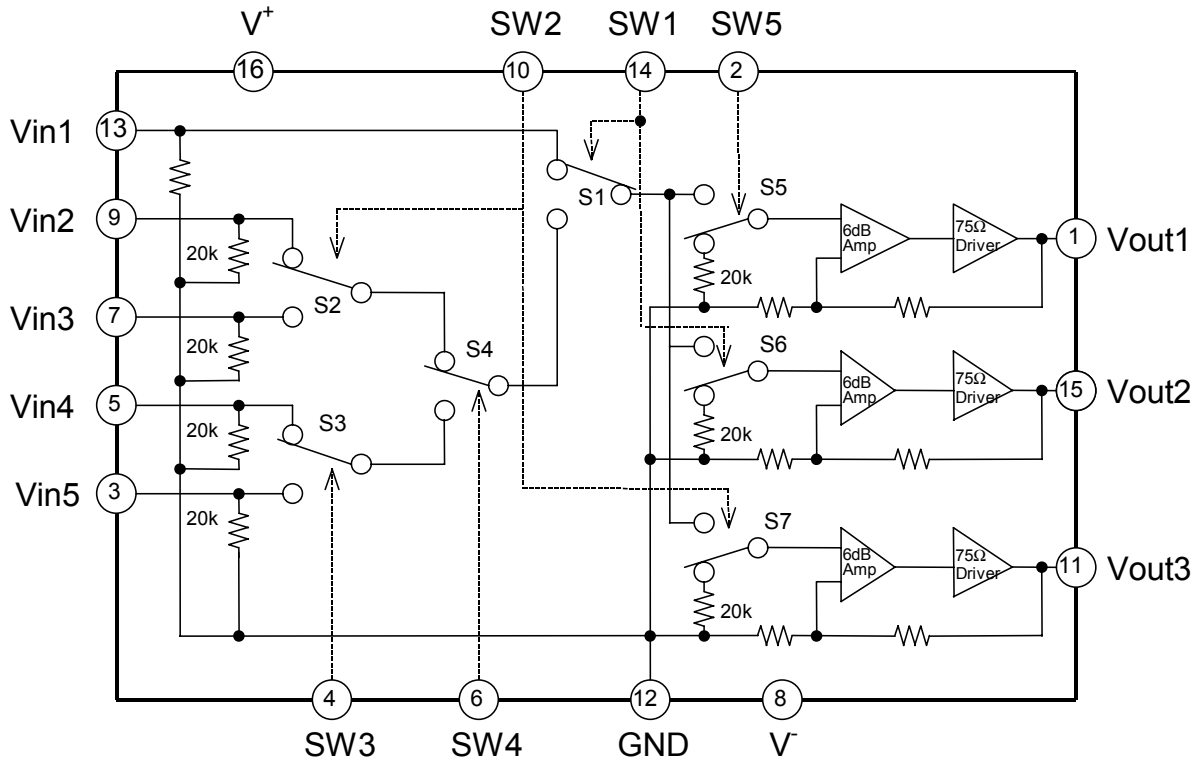

■ **EQUIVALENT CIRCUIT**

PIN No.	PIN NAME	INSIDE EQUIVALENT CIRCUIT	VOLTAGE
16	V^+		5V
8	V^-		-5V
12	GND		-
13 9 7 5 3	Vin1 Vin2 Vin3 Vin4 Vin5	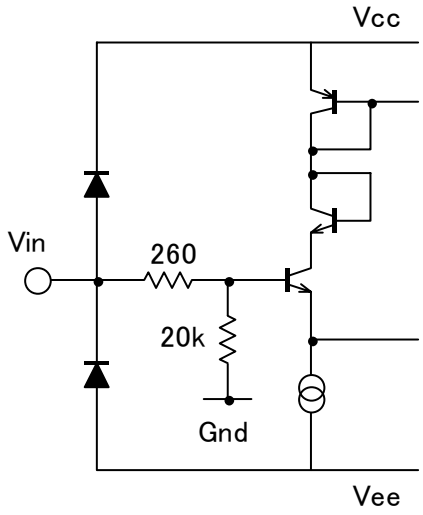	0V
1 15 11	Vout1 Vout2 Vout3	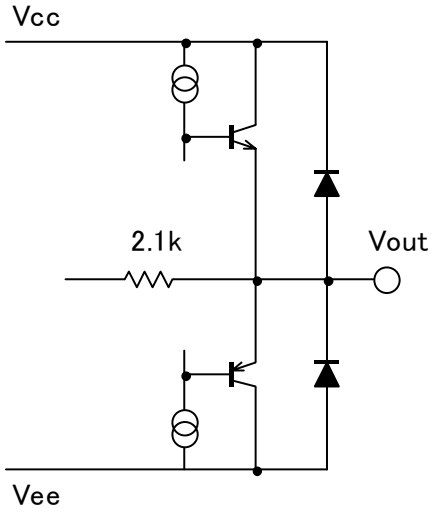	0V
4 6 2	SW3 SW4 SW5	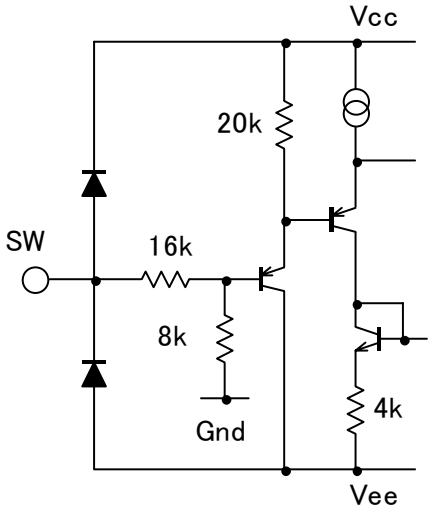	-

NJM2595

■ EQUIVALENT CIRCUIT

PIN No.	PIN NAME	INSIDE EQUIVALENT CIRCUIT	VOLTAGE
14 10	SW1 SW2	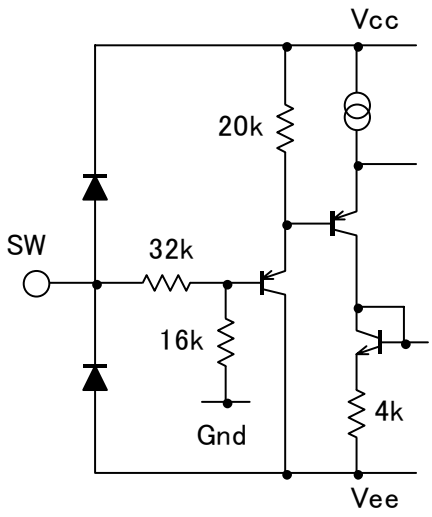	-

■ TEST CIRCUIT

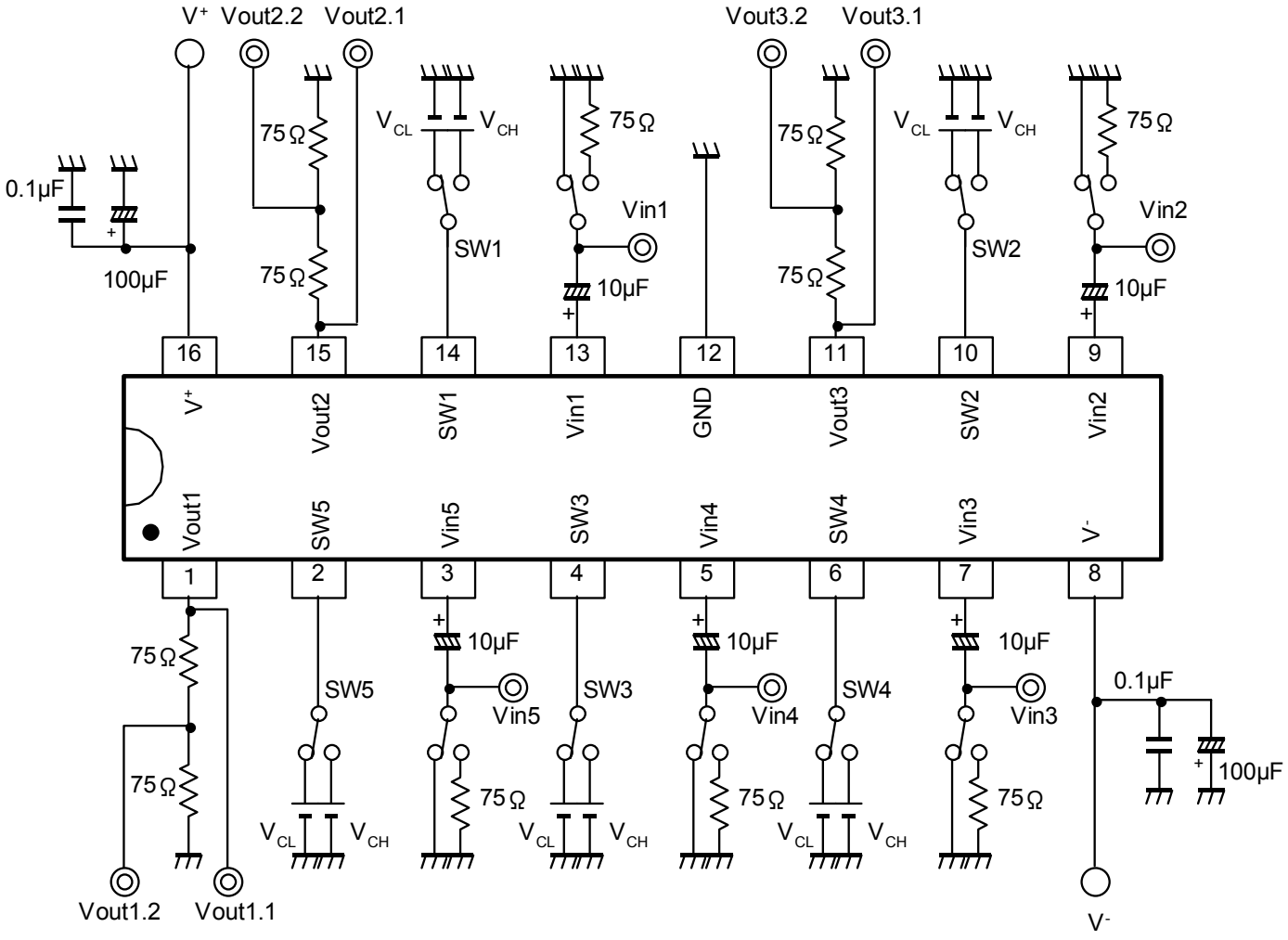

NJM2068M (OP - AMP)

JRC

NJM2068

LOW-NOISE DUAL OPERATIONAL AMPLIFIER

■ GENERAL DESCRIPTION

The NJM2068 is a high performance, low noise dual operational amplifier. This amplifier features popular pin-out, superior noise performance, and superior total harmonic distortion. This amplifier also features guaranteed noise performance with substantially higher gain-bandwidth product and slew rate which far exceeds that of the 4558 type amplifier. The specially designed low noise input transistors allow the NJM2068 to be used in very low noise signal processing applications such as audio preamplifiers and servo error amplifier.

■ PACKAGE OUTLINE

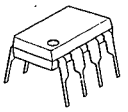

NJM2068D

NJM2068M

NJM2068V

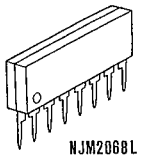

NJM2068L

■ FEATURES

- Operating Voltage (±4V～±18V)
- Low Total Harmonic Distortion (0.001% typ.)
- Low Noise Voltage (FLAT+JISA, 0.56 μV typ.)
- High Slew Rate (6V/μs typ.)
- Unity Gain Bandwidth (27MHz @f=10kHz)
- Package Outline DIP8, DMP8, SIP8, SSOP8
- Bipolar Technology

4

■ PIN CONFIGURATION

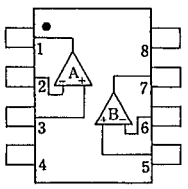

NJM2068D
NJM2068M
NJM2068V

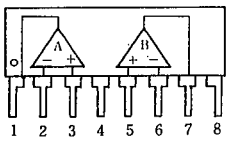

NJM2068L

PIN FUNCITON
1. A OUTPUT
2. A−INPUT
3. A+INPUT
4. V⁻
5. B+INPUT
6. B−INPUT
7. B OUTPUT
8. V⁺

■ EQUIVALENT CIRCUIT (1/2 Shown)

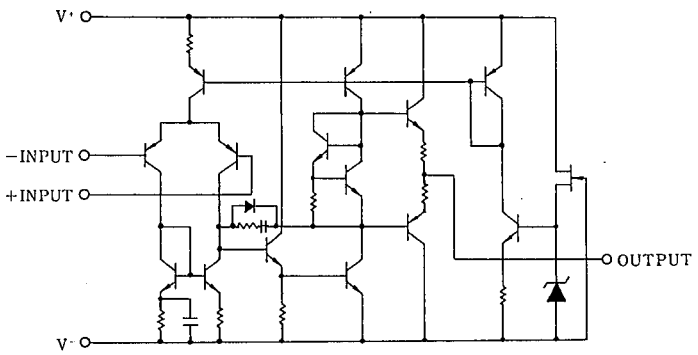

JRC

IC86

NJM4556A

DUAL HIGH CURRENT OPERATIONAL AMPLIFIER

■ GENERAL DESCRIPTION

The NJM4556A integrated circuit is a high-gain, high output current dual operational amplifier capable of driving ±70mA into 150 Ω loads (±10.5V output voltage), and operating low supply voltage (V^+/V^-=±2V~).

The NJM4556A combines many of the fetures of the popular NJM4558 as well as having the capability of driving 150Ω loads. In addition, the wide band-width, low noise, high slew rate and low distortion of the NJM4556A make it ideal for many audio, telecommunications and instrumentation applications.

■ PACKAGE OUTLINE

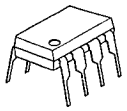

NJM4556AD

NJM4556AM

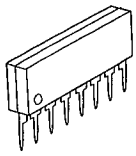

NJM4556AL

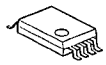

NJM4556AV

■ FEATURES

- Operating Voltage (±2V~±18V)
- High Output Current (Io=70mA)
- Slew Rate (3V/μs typ.)
- Gain Band Width Product (8MHz typ.)
- Package Outline DIP8, DMP8, SIP8, SSOP8
- Bipolar Technology

■ PIN CONFIGURATION

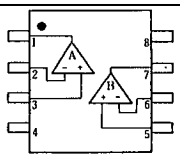

NJM4556AD
NJM4556AM
NJM4556AV

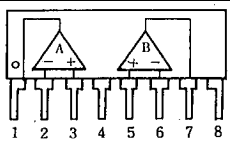

NJM4556AL

PIN FUNCTION
1. A OUTPUT
2. A−INPUT
3. A+INPUT
4. V⁻
5. B+INPUT
6. B−INPUT
7. B OUTPUT
8. V⁺

■ EQUIVALENT CIRCUIT (1/2 Shown)

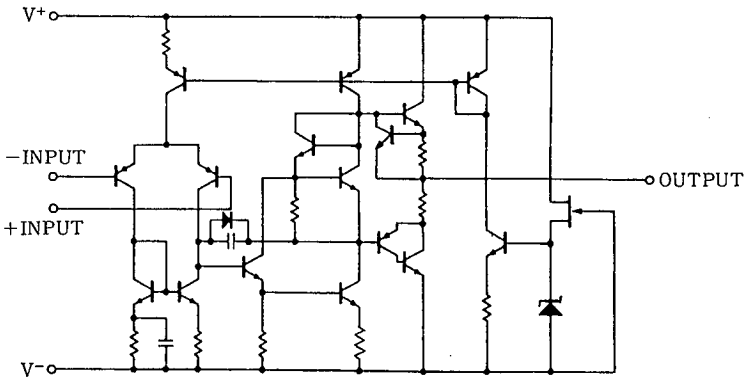

IC87 RE5VL28CATZ IC , RESET

PIN CONFIGURATION

• **TO-92**

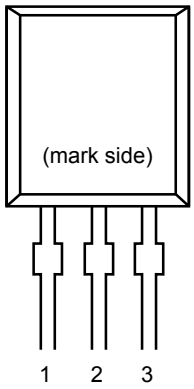

• **SOT-89**

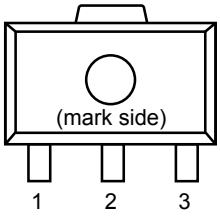

• **SOT-23-5**

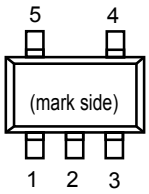

PIN DESCRIPTION

• **TO-92**

Pin No	Symbol
1	OUT
2	VDD
3	GND

• **SOT-89**

Pin No	Symbol
1	OUT
2	VDD
3	GND

• **SOT-23-5**

Pin No	Symbol
1	OUT
2	VDD
3	GND
4	NC
5	NC

BLOCK DIAGRAMS

• **Nch Open Drain Output (R5VL※A)**

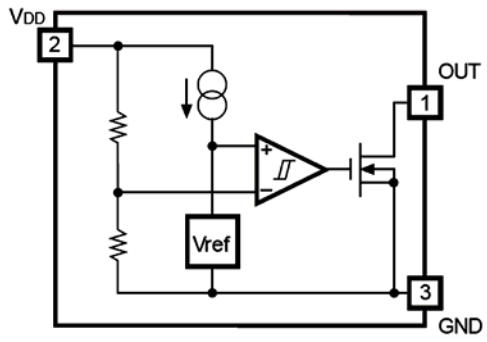

• **CMOS Output (R5VL※C)**

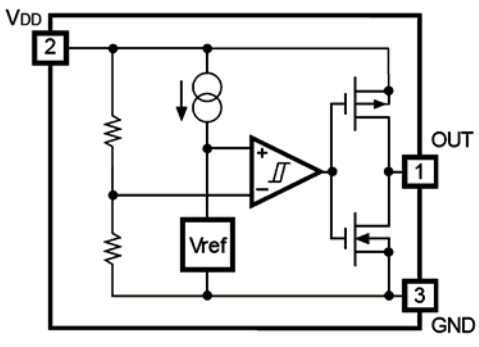

AK4384

106dB 192kHz 24-Bit 2ch ΔΣ DAC

GENERAL DESCRIPTION

The AK4384 offers the perfect mix for cost and performance based audio systems. Using AKM's multi bit architecture for its modulator the AK4384 delivers a wide dynamic range while preserving linearity for improved THD+N performance. The AK4384 integrates a combination of SCF and CTF filters increasing performance for systems with excessive clock jitter. The 24 Bit word length and 192kHz sampling rate make this part ideal for a wide range of applications including DVD-Audio. The AK4384 is offered in a space saving 16pin TSSOP package.

FEATURES

- ☐ Sampling Rate Ranging from 8kHz to 192kHz
- ☐ 128 times Oversampling (Normal Speed Mode)
- ☐ 64 times Oversampling (Double Speed Mode)
- ☐ 32 times Oversampling (Quad Speed Mode)
- ☐ 24-Bit 8 times FIR Digital Filter
- ☐ SCF with High Tolerance to Clock Jitter
- ☐ 2nd order Analog LPF
- ☐ Single Ended Output Buffer
- ☐ Digital de-emphasis for 32k, 44.1k and 48kHz sampling
- ☐ Soft mute
- ☐ Digital Attenuator (Linear 256 steps)
- ☐ I/F format: 24-Bit MSB justified, 24/20/16-Bit LSB justified or I^2S
- ☐ Master clock: 256fs, 384fs, 512fs, 768fs or 1152fs (Normal Speed Mode)
  128fs, 192fs, 256fs or 384fs (Double Speed Mode)
  128fs, 192fs (Quad Speed Mode)
- ☐ THD+N: -94dB
- ☐ Dynamic Range: 106dB
- ☐ Power supply: 4.5 to 5.5V
- ☐ Very Small Package: 16pin TSSOP (6.4mm x 5.0mm)

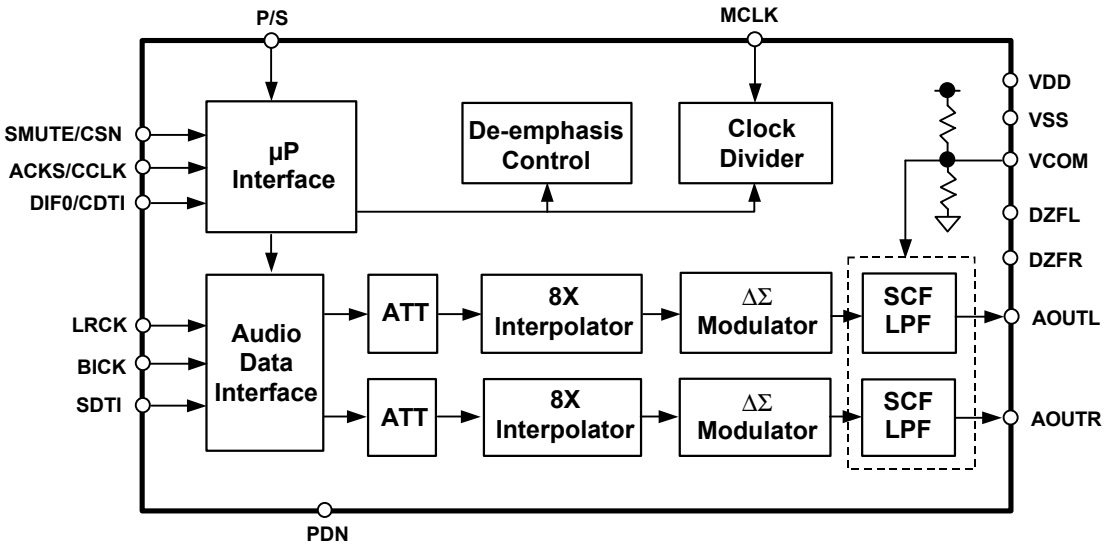

■ Ordering Guide

AK4384VT	-40 ~ +85°C	16pin TSSOP (0.65mm pitch)
AKD4384	Evaluation Board for AK4384	

■ Pin Layout

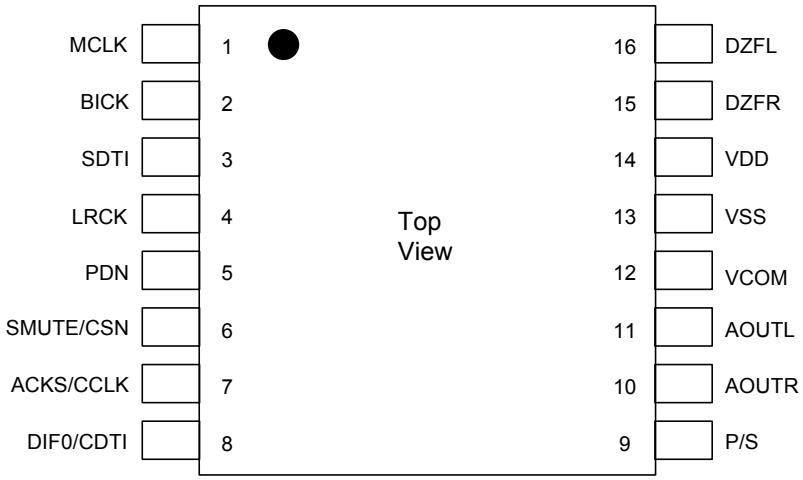

PIN/FUNCTION

No.	Pin Name	I/O	Function
1	MCLK	I	Master Clock Input Pin An external TTL clock should be input on this pin.
2	BICK	I	Audio Serial Data Clock Pin
3	SDTI	I	Audio Serial Data Input Pin
4	LRCK	I	L/R Clock Pin
5	PDN	I	Power-Down Mode Pin When at "L", the AK4384 is in the power-down mode and is held in reset. The AK4384 should always be reset upon power-up.
6	SMUTE	I	Soft Mute Pin in parallel mode "H": Enable, "L": Disable
	CSN	I	Chip Select Pin in serial mode
7	ACKS	I	Auto Setting Mode Pin in parallel mode "L": Manual Setting Mode, "H": Auto Setting Mode
	CCLK	I	Control Data Clock Pin in serial mode
8	DIF0	I	Audio Data Interface Format Pin in parallel mode
	CDTI	I	Control Data Input Pin in serial mode
9	P/S	I	Parallel/Serial Select Pin (Internal pull-up pin) "L": Serial control mode, "H": Parallel control mode
10	AOUTR	O	Rch Analog Output Pin
11	AOUTL	O	Lch Analog Output Pin
12	VCOM	O	Common Voltage Pin, VDD/2 Normally connected to VSS with a 0.1μF ceramic capacitor in parallel with a 10μF electrolytic cap.
13	VSS	-	Ground Pin
14	VDD	-	Power Supply Pin
15	DZFR	O	Rch Data Zero Input Detect Pin
16	DZFL	O	Lch Data Zero Input Detect Pin

Note: All input pins except pull-up pin should not be left floating.

74LCX32

LOW VOLTAGE CMOS QUAD 2-INPUT OR GATE WITH 5V TOLERANT INPUTS

- 5V TOLERANT INPUTS
- HIGH SPEED:
  t_{PD} = 5.2ns (MAX.) at V_{CC} = 3V
- POWER DOWN PROTECTION ON INPUTS AND OUTPUTS
- SYMMETRICAL OUTPUT IMPEDANCE:
  $|I_{OH}| = I_{OL}$ = 24mA (MIN) at V_{CC} = 3V
- PCI BUS LEVELS GUARANTEED AT 24 mA
- BALANCED PROPAGATION DELAYS:
  $t_{PLH} \cong t_{PHL}$
- OPERATING VOLTAGE RANGE:
  V_{CC}(OPR) = 2.0V to 3.6V (1.5V Data Retention)
- PIN AND FUNCTION COMPATIBLE WITH 74 SERIES 32
- LATCH-UP PERFORMANCE EXCEEDS 500mA (JESD 17)
- ESD PERFORMANCE:
  HBM > 2000V (MIL STD 883 method 3015);
  MM > 200V

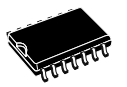

SOP

TSSOP

Table 1: Order Codes

PACKAGE	T & R
SOP	74LCX32MTR
TSSOP	74LCX32TTR

DESCRIPTION

The 74LCX32 is a low voltage CMOS QUAD 2-INPUT OR GATE fabricated with sub-micron silicon gate and double-layer metal wiring C^2MOS technology. It is ideal for low power and high speed 3.3V applications; it can be interfaced to 5V signal environment for inputs.

It has same speed performance at 3.3V than 5V AC/ACT family, combined with a lower power consumption.

All inputs and outputs are equipped with protection circuits against static discharge, giving them 2KV ESD immunity and transient excess voltage.

Figure 1: Pin Connection And IEC Logic Symbols

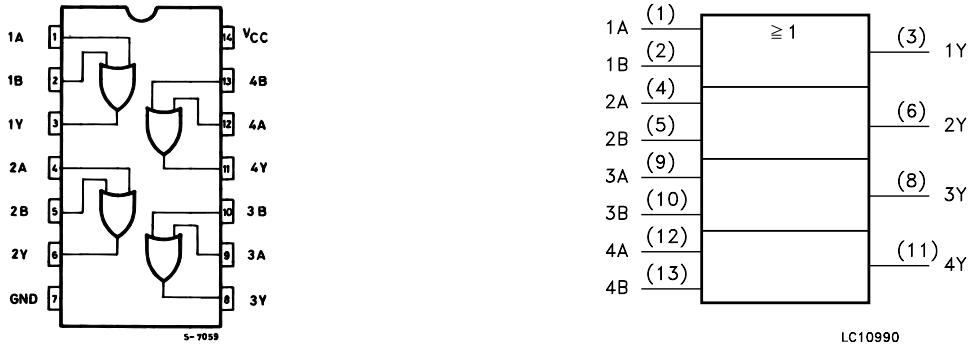

Figure 2: Input And Output Equivalent Circuit

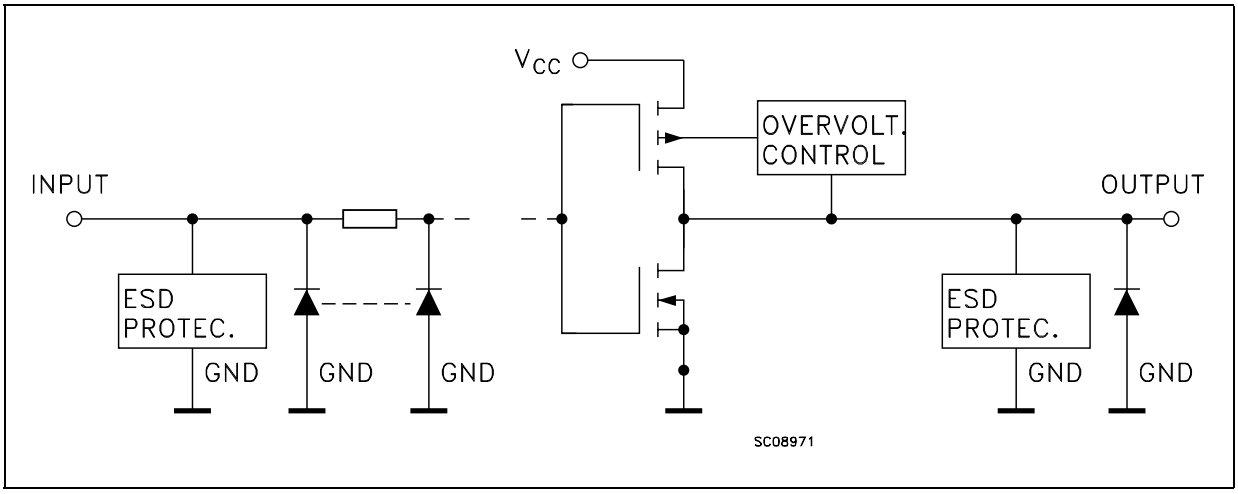

Table 2: Pin Description

PIN N°	SYMBOL	NAME AND FUNCTION
1, 4, 9, 12	1A to 4A	Data Inputs
2, 5, 10, 13	1B to 4B	Data Inputs
3, 6, 8, 11	1Y to 4Y	Data Outputs
7	GND	Ground (0V)
14	V_{CC}	Positive Supply Voltage

Table 3: Truth Table

A	B	Y
L	L	L
L	H	H
H	L	H
H	H	H

Table 4: Absolute Maximum Ratings

Symbol	Parameter	Value	Unit
V_{CC}	Supply Voltage	-0.5 to +7.0	V
V_I	DC Input Voltage	-0.5 to +7.0	V
V_O	DC Output Voltage (V_{CC} = 0V)	-0.5 to +7.0	V
V_O	DC Output Voltage (High or Low State) (note 1)	-0.5 to V_{CC} + 0.5	V
I_{IK}	DC Input Diode Current	- 50	mA
I_{OK}	DC Output Diode Current (note 2)	- 50	mA
I_O	DC Output Current	± 50	mA
I_{CC}	DC Supply Current per Supply Pin	± 100	mA
I_{GND}	DC Ground Current per Supply Pin	± 100	mA
T_{stg}	Storage Temperature	-65 to +150	°C
T_L	Lead Temperature (10 sec)	300	°C

Absolute Maximum Ratings are those values beyond which damage to the device may occur. Functional operation under these conditions is not implied
1) I_O absolute maximum rating must be observed
2) V_O < GND

74ACT04

HEX INVERTER

- HIGH SPEED: t_{PD} = 5.0ns (TYP.) at V_{CC} = 5V
- LOW POWER DISSIPATION: I_{CC} = 2µA(MAX.) at T_A=25°C
- COMPATIBLE WITH TTL OUTPUTS V_{IH} = 2V (MIN.), V_{IL} = 0.8V (MAX.)
- 50Ω TRANSMISSION LINE DRIVING CAPABILITY
- SYMMETRICAL OUTPUT IMPEDANCE: $|I_{OH}| = I_{OL}$ = 24mA (MIN)
- BALANCED PROPAGATION DELAYS: $t_{PLH} \cong t_{PHL}$
- OPERATING VOLTAGE RANGE: V_{CC} (OPR) = 4.5V to 5.5V
- PIN AND FUNCTION COMPATIBLE WITH 74 SERIES 04
- IMPROVED LATCH-UP IMMUNITY

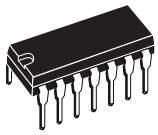

DIP

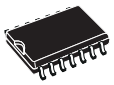

SOP

TSSOP

ORDER CODES

PACKAGE	TUBE	T & R
DIP	74ACT04B	
SOP	74ACT04M	74ACT04MTR
TSSOP		74ACT04TTR

DESCRIPTION

The 74ACT04 is an advanced high-speed CMOS HEX INVERTER fabricated with sub-micron silicon gate and double-layer metal wiring C^2MOS technology.
The internal circuit is composed of 3 stages including buffer output, which enables high noise immunity and stable output.

The device is designed to interface directly High Speed CMOS systems with TTL, NMOS and CMOS output voltage levels.
All inputs and outputs are equipped with protection circuits against static discharge, giving them 2KV ESD immunity and transient excess voltage.

PIN CONNECTION AND IEC LOGIC SYMBOLS

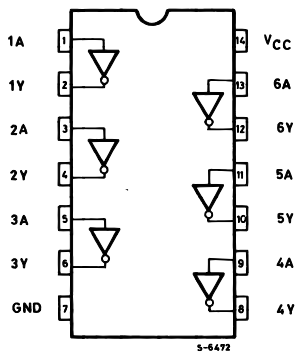

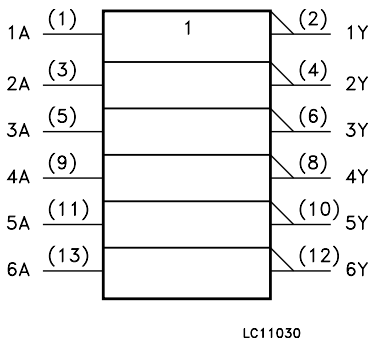

74ACT04

INPUT AND OUTPUT EQUIVALENT CIRCUIT

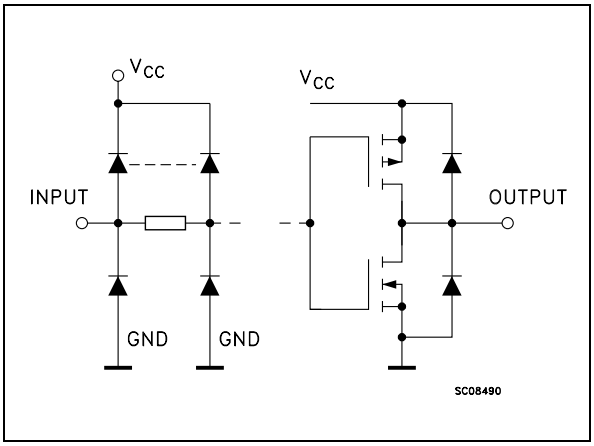

PIN DESCRIPTION

PIN No	SYMBOL	NAME AND FUNCTION
1, 3, 5, 9, 11, 13	1A to 6A	Data Inputs
2, 4, 6, 8, 10, 12	1Y to 6Y	Data Outputs
7	GND	Ground (0V)
14	V_{CC}	Positive Supply Voltage

TRUTH TABLE

A	Y
L	H
H	L

ABSOLUTE MAXIMUM RATINGS

Symbol	Parameter	Value	Unit
V_{CC}	Supply Voltage	-0.5 to +7	V
V_I	DC Input Voltage	-0.5 to V_{CC} + 0.5	V
V_O	DC Output Voltage	-0.5 to V_{CC} + 0.5	V
I_{IK}	DC Input Diode Current	± 20	mA
I_{OK}	DC Output Diode Current	± 20	mA
I_O	DC Output Current	± 50	mA
I_{CC} or I_{GND}	DC V_{CC} or Ground Current	± 200	mA
T_{stg}	Storage Temperature	-65 to +150	°C
T_L	Lead Temperature (10 sec)	300	°C

Absolute Maximum Ratings are those values beyond which damage to the device may occur. Functional operation under these conditions is not implied.

RECOMMENDED OPERATING CONDITIONS

Symbol	Parameter	Value	Unit
V_{CC}	Supply Voltage	4.5 to 5.5	V
V_I	Input Voltage	0 to V_{CC}	V
V_O	Output Voltage	0 to V_{CC}	V
T_{op}	Operating Temperature	-55 to 125	°C
dt/dv	Input Rise and Fall Time V_{CC} = 4.5 to 5.5V (note 1)	8	ns/V

1) V_{IN} from 0.8V to 2.0V

CIRRUS LOGIC
Leading the Digital Entertainment Revolution™

CS42528

114 dB, 192 kHz 8-Ch Codec with S/PDIF Receiver

Features

- Eight 24-bit D/A, two 24-bit A/D Converters
- 114 dB DAC / 114 dB ADC Dynamic Range
- -100 dB THD+N
- System Sampling Rates up to 192 kHz
- S/PDIF Receiver Compatible with EIAJ CP1201 and IEC-60958
- Recovered S/PDIF Clock or System Clock Selection
- 8:2 S/PDIF Input MUX
- ADC High-pass Filter for DC Offset Calibration
- Expandable ADC Channels and One-line Mode Support
- Digital Output Volume Control with Soft Ramp
- Digital +/-15dB Input Gain Adjust for ADC
- Differential Analog Architecture
- Supports logic levels between 5 V and 1.8 V.

General Description

The CS42528 codec provides two analog-to-digital and eight digital-to-analog delta-sigma converters, as well as an integrated S/PDIF receiver, in a 64-pin LQFP package.

The CS42528 integrated S/PDIF receiver supports up to eight inputs, clock recovery circuitry and format auto-detection. The internal stereo ADC is capable of independent channel gain control for single-ended or differential analog inputs. All eight channels of DAC provide digital volume control and differential analog outputs. The general purpose outputs may be driven high or low, or mapped to a variety of DAC mute controls or ADC overflow indicators.

The CS42528 is ideal for audio systems requiring wide dynamic range, negligible distortion and low noise, such as A/V receivers, DVD receivers, digital speaker and automotive audio systems.

ORDERING INFORMATION

CS42528-CQZ	-10° to 70° C	64-pin LQFP	Lead Free
CS42528-DQZ	-40° to 85° C	64-pin LQFP	Lead Free
CDB42528	Evaluation Board		

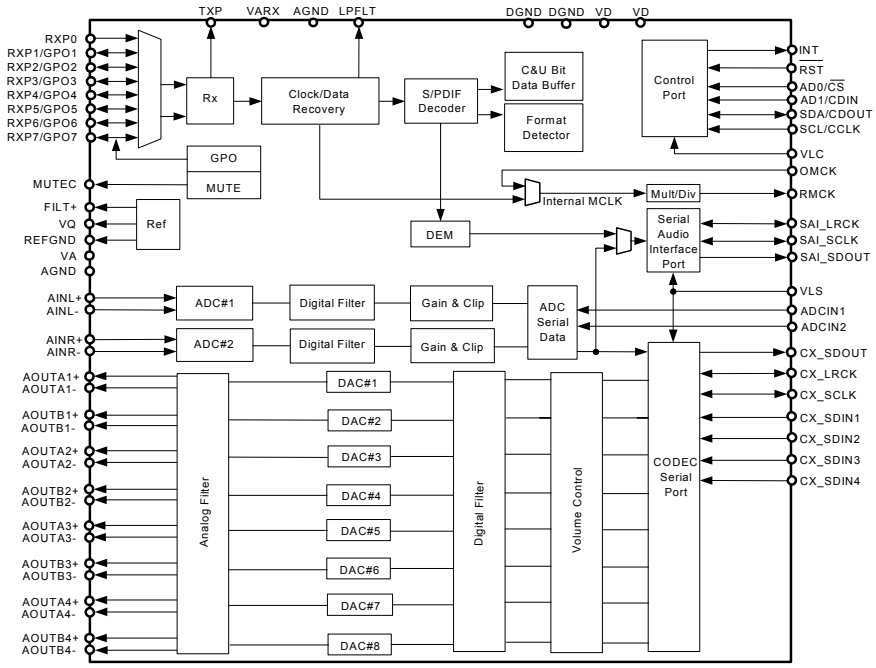

Preliminary Product Information

Cirrus Logic, Inc.
http://www.cirrus.com

2. PIN DESCRIPTIONS

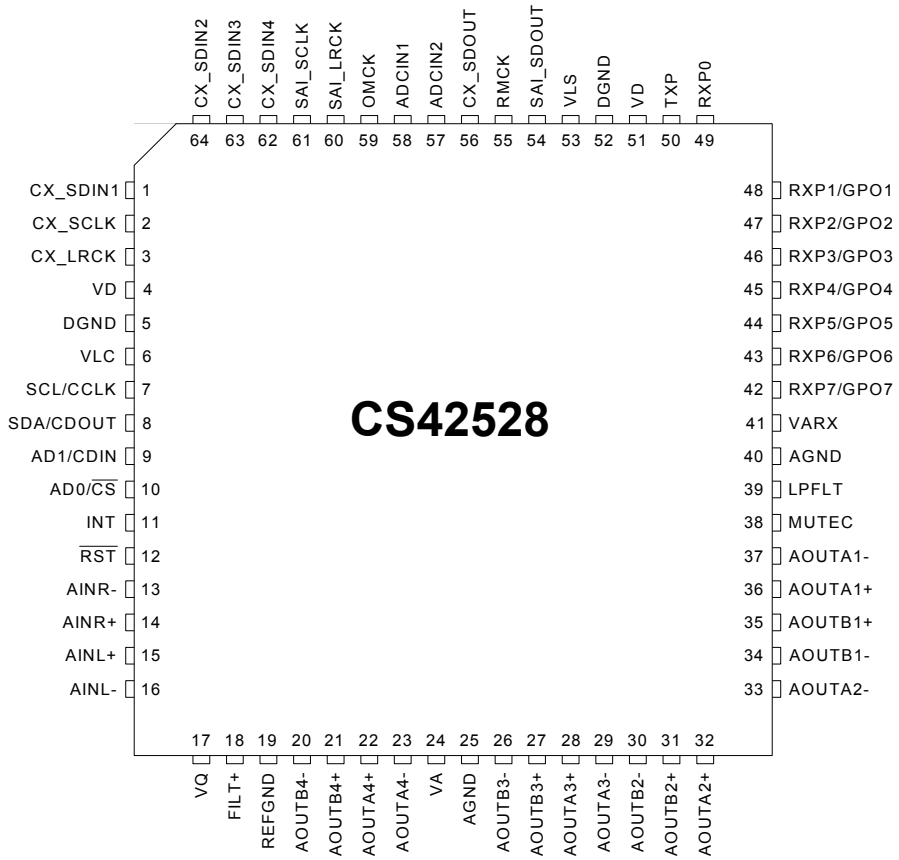

Pin Name	#	Pin Description
CX_SDIN1 **CX_SDIN2** **CX_SDIN3** **CX_SDIN4**	1 64 63 62	**Codec Serial Audio Data Input** (*Input*) - Input for two's complement serial audio data.
CX_SCLK	2	**CODEC Serial Clock** *(Input/Output)* - Serial clock for the CODEC serial audio interface.
CX_LRCK	3	**CODEC Left Right Clock** (*Input*/*Output*) - Determines which channel, Left or Right, is currently active on the CODEC serial audio data line.
VD	4 51	**Digital Power** (*Input*) - Positive power supply for the digital section.
DGND	5 52	**Digital Ground** (*Input*) - Ground reference. Should be connected to digital ground.
VLC	6	**Control Port Power** (*Input*) **-** Determines the required signal level for the control port.
SCL/CCLK	7	**Serial Control Port Clock** (*Input*) - Serial clock for the serial control port. Requires an external pull-up resistor to the logic interface voltage in I^2C mode as shown in the Typical Connection Diagram.
SDA/CDOUT	8	**Serial Control Data** (*Input/Output*) **-** SDA is a data I/O line in I^2C mode and requires an external pull-up resistor to the logic interface voltage, as shown in the Typical Connection Diagram. CDOUT is the output data line for the control port interface in SPI mode.
AD1/CDIN	9	**Address Bit 1 (I^2C)/Serial Control Data (SPI)** (*Input*) - AD1 is a chip address pin in I^2C mode; CDIN is the input data line for the control port interface in SPI mode.

AD0/$\overline{CS}$	10	**Address Bit 0 (I^2C)/Control Port Chip Select (SPI)** *(Input)* **-** AD0 is a chip address pin in I^2C mode; $\overline{CS}$ is the chip select signal in SPI mode.
INT	11	**Interrupt** *(Output)* - The CS42528 will generate an interrupt condition as per the Interrupt Mask register. See “Interrupts” on page 40 for more details.
$\overline{RST}$	12	**Reset** (*Input*) - The device enters a low power mode and all internal registers are reset to their default settings when low.
AINR- **AINR+**	13 14	**Differential Right Channel Analog Input** (*Input*) - Signals are presented differentially to the delta-sigma modulators via the AINR+/- pins.
AINL+ **AINL-**	15 16	**Differential Left Channel Analog Input** (*Input*) - Signals are presented differentially to the delta-sigma modulators via the AINL+/- pins.
VQ	17	**Quiescent Voltage** (*Output*) **-** Filter connection for internal quiescent reference voltage.
FILT+	18	**Positive Voltage Reference** (*Output*) - Positive reference voltage for the internal sampling circuits.
REFGND	19	**Reference Ground** (*Input*) - Ground reference for the internal sampling circuits.
AOUTA1 +,- **AOUTB1 +,-** **AOUTA2 +,-** **AOUTB2 +,-** **AOUTA3 +,-** **AOUTB3 +,-** **AOUTA4 +,-** **AOUTB4 +,-**	36,37 35,34 32,33 31,30 28,29 27,26 22,23 21,20	**Differential Analog Output** (*Output*) - The full-scale differential analog output level is specified in the Analog Characteristics specification table.
VA **VARX**	24 41	**Analog Power** (*Input*) - Positive power supply for the analog section.
AGND	25 40	**Analog Ground** (*Input*) - Ground reference. Should be connected to analog ground.
MUTEC	38	**Mute Control** (*Output*) - The Mute Control pin outputs high impedance following an initial power-on condition or whenever the PDN bit is set to a ‘1’, forcing the codec into power-down mode. The signal will remain in a high impedance state as long as the part is in power-down mode. The Mute Control pin goes to the selected “active” state during reset, muting, or if the master clock to left/right clock frequency ratio is incorrect. This pin is intended to be used as a control for external mute circuits to prevent the clicks and pops that can occur in any single supply system. The use of external mute circuits are not mandatory but may be desired for designs requiring the absolute minimum in extraneous clicks and pops.
LPFLT	39	**PLL Loop Filter** (*Output*) - An RC network should be connected between this pin and ground.
RXP7/GPO7 **RXP6/GPO6** **RXP5/GPO5** **RXP4/GPO4** **RXP3/GPO3** **RXP2/GPO2** **RXP1/GPO1**	42 43 44 45 46 47 48	**S/PDIF Receiver Input/ General Purpose Output** (*Input/Output*) - Receiver inputs for S/PDIF encoded data. The CS42528 has an internal 8:2 multiplexer to select the active receiver port, according to the Receiver Mode Control 2 register. These pins can also be configured as general purpose output pins, ADC Overflow indicators or Mute Control outputs according to the RXP/General Purpose Pin Control registers.
RXP0	49	**S/PDIF Receiver Input** (*Input*) - Dedicated receiver input for S/PDIF encoded data.
TXP	50	**S/PDIF Transmitter Output** (*Output*) - S/PDIF encoded data output, mapped directly from one of the receiver inputs as indicated by the Receiver Mode Control 2 register.
VLS	53	**Serial Port Interface Power** (*Input*) - Determines the required signal level for the serial port interfaces.
SAI_SDOUT	54	**Serial Audio Interface Serial Data Output** (*Output*) - Output for two’s complement serial audio PCM data from the S/PDIF incoming stream. This pin can also be configured to transmit the output of the internal and external ADCs.
RMCK	55	**Recovered Master Clock** (*Output*) - Recovered master clock output from the External Clock Reference (OMCK, pin 59) or the PLL which is locked to the incoming S/PDIF stream or CX_LRCK.

CX_SDOUT	56	**CODEC Serial Data Output** (*Output*) - Output for two's complement serial audio data from the internal and external ADCs.
ADCIN1 **ADCIN2**	58 57	**External ADC Serial Input** (*Input*) - The CS42528 provides for up to two external stereo analog to digital converter inputs to provide a maximum of six channels on one serial data output line when the CS42528 is placed in One Line mode.
OMCK	59	**External Reference Clock** (*Input*) - External clock reference that must be within the ranges specified in the register "OMCK Frequency (OMCK Freqx)" on page 54.
SAI_LRCK	60	**Serial Audio Interface Left/Right Clock** (*Input*/*Output*) - Determines which channel, Left or Right, is currently active on the serial audio data line.
SAI_SCLK	61	**Serial Audio Interface Serial Clock** *(Input/Output)* - Serial clock for the Serial Audio Interface.

KEC

SEMICONDUCTOR TECHNICAL DATA

KIA378R05PI~KIA378R15PI

BIPOLAR LINEAR INTEGRATED CIRCUIT

4 TERMINAL 3A OUTPUT LOW DROP VOLTAGE REGULATOR

The KIA378R × × Series are Low Drop Voltage Regulator suitable for various electronic equipments. It provides constant voltage power source with TO-220IS-4 terminal lead full molded PKG. The Regulator has multi-function such as over current protection, overheat protection and ON/OFF control.

FEATURES

- 3.0A Output Low Drop Voltage Regulator.
- Built in ON/OFF Control Terminal.
- Built in Over Current Protection, Over Heat Protection Function.

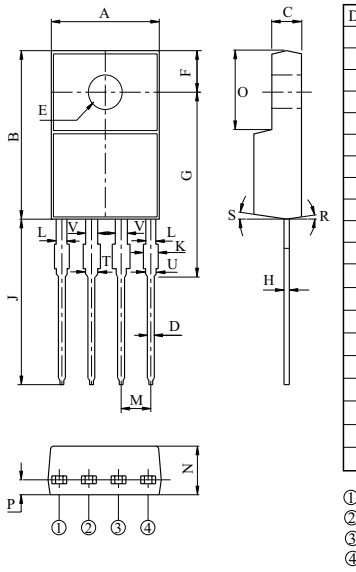

DIM	MILLIMETERS
A	10.00±0.20
B	15.00±0.20
C	2.70±0.20
D	0.60±0.10
E	Φ3.20±0.20
F	3.50±0.10
G	15.70±0.20
H	0.40±0.10
J	14.3+0.2/-0.1
K	1.45±0.10
L	1.00±0.10
M	2.54
N	4.50±0.20
O	7.5±0.1
P	1.50±0.10
R	5°
S	8°
T	1.30±0.1
U	3-1.00±0.1
V	1.30±0.1

TO-220IS-4

LINE UP

ITEM	OUTPUT VOLTAGE (Typ.)	UNIT
KIA378R05PI	5	V
KIA378R06PI	6	
KIA378R08PI	8	
KIA378R09PI	9	
KIA378R10PI	10	
KIA378R12PI	12	
KIA378R15PI	15	

MAXIMUM RATINGS (Ta=25℃)

CHARACTERISTIC	SYMBOL	RATING	UNIT	Remark
Input Voltage	V_{IN}	35	V	-
ON/OFF Control Voltage	V_C	35	V	-
Output Current	I_O	3	A	-
Power Dissipation 1	P_{d1}	1.5	W	No heatsink
Power Dissipation 2	P_{d2}	15	W	with heatsink
Junction Temperature	T_j	-40～150	℃	-
Operating Temperature	T_{opr}	-30～85	℃	-
Storage Temperature	T_{stg}	-40～150	℃	-
Soldering Temperature (10sec)	T_{sol}	260	℃	-

KEC

SEMICONDUCTOR
TECHNICAL DATA

KIA278R00PI
BIPOLAR LINEAR INTEGRATED CIRCUIT

2A ADJUSTABLE LOW DROP VOLTAGE REGULATOR

The KIA278R00PI is a Low Drop Voltage Regulator suitable for various electronic equipments. It provides constant voltage power source with TO-220-4 terminal lead full molded PKG. The Regulator has multi function such as over current protection, overheat protection.

FEATURES

- Adjustable Output Voltage (Range : 1.5~30V)
- 1.0A Output Low Drop Voltage Regulator.
- Built in Over Current Protection, Over Heat Protection Function.

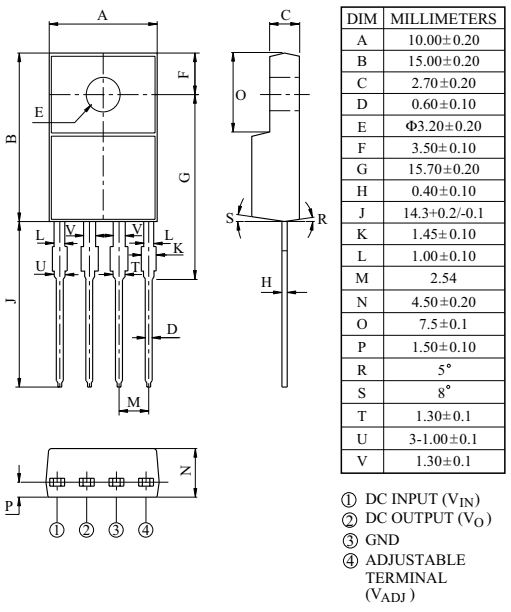

DIM	MILLIMETERS
A	10.00±0.20
B	15.00±0.20
C	2.70±0.20
D	0.60±0.10
E	Φ3.20±0.20
F	3.50±0.10
G	15.70±0.20
H	0.40±0.10
J	14.3+0.2/-0.1
K	1.45±0.10
L	1.00±0.10
M	2.54
N	4.50±0.20
O	7.5±0.1
P	1.50±0.10
R	5°
S	8°
T	1.30±0.1
U	3-1.00±0.1
V	1.30±0.1

TO-220IS-4

MAXIMUM RATINGS (Ta=25℃)

CHARACTERISTIC	SYMBOL	RATING	UNIT	Remark
Input Voltage	V_{IN}	35	V	-
Output Current	I_{OUT}	2	A	-
Power Dissipation 1	P_{D1}	1.5	W	No heatsink
Power Dissipation 2	P_{D2}	15	W	with heatsink
Junction Temperature	T_j	150	℃	-
Operating Temperature	T_{opr}	-20～80	℃	-
Storage Temperature	T_{stg}	-30～150	℃	-
Soldering Temperature (10sec)	T_{sol}	260	℃	-

KEC

SEMICONDUCTOR
TECHNICAL DATA

KIA278R05PI~KIA278R15PI
BIPOLAR LINEAR INTEGRATED CIRCUIT

4 TERMINAL 2A OUTPUT LOW DROP
VOLTAGE REGULATOR

The KIA278R×× Series are Low Drop Voltage Regulator suitable for various electronic equipments.
It provides constant voltage power source with TO-220 4 terminal lead full molded PKG. The Regulator has multi function such as over current protection, overheat protection and ON/OFF control.

FEATURES

- 2.0A Output Low Drop Voltage Regulator.
- Built in ON/OFF Control Terminal.
- Built in Over Current Protection, Over Heat Protection Function.

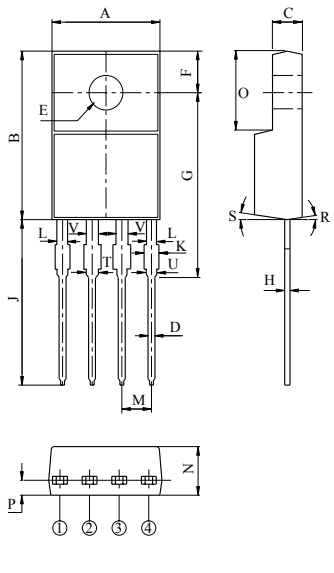

DIM	MILLIMETERS
A	10.00±0.20
B	15.00±0.20
C	2.70±0.20
D	0.60±0.10
E	Φ3.20±0.20
F	3.50±0.10
G	15.70±0.20
H	0.40±0.10
J	14.3+0.2/-0.1
K	1.45±0.10
L	1.00±0.10
M	2.54
N	4.50±0.20
O	7.5± 0.1
P	1.50±0.10
R	5°
S	8°
T	1.30±0.1
U	3-1.00±0.1
V	1.30±0.1

TO-220IS-4

LINE UP

ITEM	OUTPUT VOLTAGE (Typ.)	UNIT
KIA278R05PI	5	V
KIA278R06PI	6	
KIA278R08PI	8	
KIA278R09PI	9	
KIA278R10PI	10	
KIA278R12PI	12	
* KIA278R15PI	15	

* Note) * : Under Development.

MAXIMUM RATING (Ta=25℃)

CHARACTERISTIC	SYMBOL	RATING	UNIT	Remark
Input Voltage	V_{IN}	35	V	-
ON/OFF Control Voltage	V_C	35	V	-
Output Current	I_O	2	A	-
Power Dissipation 1	P_{d1}	1.5	W	No heatsink
Power Dissipation 2	P_{d2}	15	W	with heatsink
Junction Temperature	T_j	125	℃	-
Operating Temperature	T_{opr}	-20～80	℃	-
Storage Temperature	T_{stg}	-30～125	℃	-
Soldering Temperature (10sec)	T_{sol}	260	℃	-

KEC

SEMICONDUCTOR
TECHNICAL DATA

KIA1117S/F00~ KIA1117S/F50
BIPOLAR LINEAR INTEGRATED CIRCUIT

LOW DROP FIXED AND ADJUSTABLE
POSITIVE VOLTAGE REGULATOR

The KIA1117S/F × × is a Low Drop Voltage Regulator able to provide up to 1A of output current, available even in adjustable version (Vref=1.25V)

FEATURES

· Low Dropout Voltage : 1.1V/Typ. (Iout=1.0A)
· Very Low Quiescent Current : 4.2㎃/Typ.
· Output Current up to 1A
· Fixed Output Voltage of 1.5V, 1.8V, 2.5V, 2.85V, 3.3V, 5.0V
· Adjustable Version Availability : Vref=1.25V
· Internal Current and Thermal Limit
· Only 10㎌ for stability
· Available in ±2%(at 25℃) and 4% in full Temperature range
· High Ripple Rejection : 80dB/Typ
· Temperature Range : 0℃~125℃

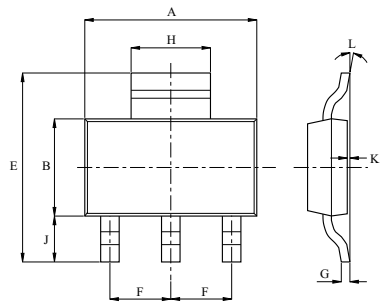

DIM	MILLIMETERS
A	6.5±0.2
B	3.5±0.2
C	1.8 MAX
D	0.7+0.15/-0.1
E	7±0.3
F	2.3 TYP
G	0.26+0.09/-0.02
H	3.0+0.15/-0.1
J	1.75±0.25
K	0.1 MAX
L	10° MAX

1. COMMOIN (ADJ.)
2. OUTPUT
3. INPUT

SOT-223

LINE UP

ITEM	OUTPUT VOLTAGE (V)	PACKAGE
KIA1117S/F00	Adjustable (1.25~10V)	S : SOT-223 F : DPAK
KIA1117S/F15	1.5	
KIA1117S/F18	1.8	
KIA1117S/F25	2.5	
KIA1117S/F28	2.85	
KIA1117S/F33	3.3	
KIA1117S/F50	5.0	

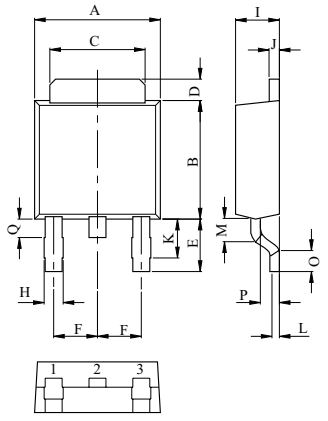

DIM	MILLIMETERS
A	6.60±0.2
B	6.10±0.2
C	5.0±0.2
D	1.10±0.2
E	2.70±0.2
F	2.30±0.1
H	1.00 MAX
I	2.30±0.2
J	0.5±0.1
K	2.00±0.20
L	0.50±0.10
M	0.91±0.10
O	0.90±0.1
P	1.00±0.10
Q	0.95 MAX

1. COMMOIN (ADJ.)
2. OUTPUT
3. INPUT

DPAK

MAXIMUM RATINGS (Ta=25℃)

CHARACTERISTIC		SYMBOL	RATING	UNIT
Input Voltage		V_{IN}	10	V
Output Current	S/F	I_{OUT}	1.0	A
Power Dissipation 1 (No heatsink)	S (Note)	P_{D1}	1.0	W
	F		1.3	
Power Dissipation 2 (Without heatsink)	S	P_{D2}	8.3	W
	F		13	
Operating Temperature		T_{opr}	0~125	℃
Storage Temperature		T_{stg}	-55~150	℃

Note) Package Mounted on FR-4 PCB 36 ×18 ×1.5㎜.
: mounting pad for the GND Lead min. 6㎠

TRANSISTOR, REGULATOR IC BLOCK DIAGRAM

TO-92M 123 1. Emitter 2. Collector 3. Base KTC2874B KSC2785Y KRA107M KRC107M KRA104MT KRC104M KTA1267	TO-92 123 1. Emitter 2. Collector 3. Base KTD1302T KTA1268GR KTC3200GR KTC3198Y KTA1271Y KSA1175YT	TO-220 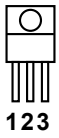 123 1. GND 2. INPUT 3. OUTPUT MCNJM7905 MC7915C NJM7908 L7905 L7915	TO-92L 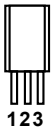 123 1. Emitter 2. Collector 3. Base KTA1024Y KSC2316Y
TO-126 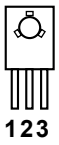 123 1. Emitter 2. Collector 3. Base 2SA1360O KTD600KG	TO-92 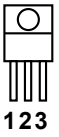 123 1. Emitter 2. Base 3. Collector KSA733CYT	TO-220 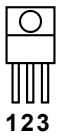 123 1. INPUT 2. GND 3. OUTPUT MC7815C MC7805C MC7809 L7805 NJM7824 L7815 L7812 L7808	TO-3P 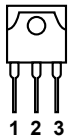 1 2 3 1. Base 2. Collector 3. Emitter 2SB1560 2SC3423O 2SD2390 2SA1360 2SB1647 2SD2560

NJM2391DL1-25 NJM2391DL1-33
LOW DROPOUT VOLTAGE REGULATOR

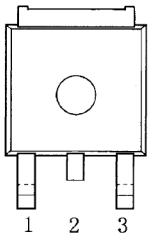

PIN FUNCTION
1. IN
2. GND
3. OUT

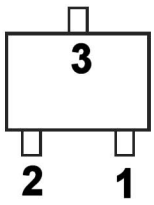

1) Emitter
2) Base
3) Collector

KRC102S
KRA102S
KRC103S
KRC107S
KRC111S
KRC1114S

N-CHANNEL MOS FET ARRAY
μPA672T

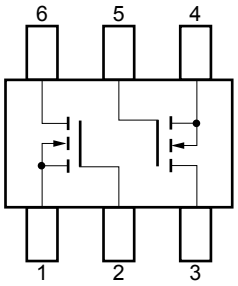

1. Source 1 (S1)
2. Gate 1 (G1)
3. Drain 2 (D2)
4. Source 2 (S2)
5. Gate 2 (G2)
6. Drain 1 (D1)

Marking: MA

PIN CONFIGURATION
SOT-23 Package
AD1580

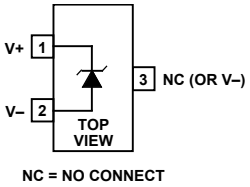

NC = NO CONNECT

SOT–223 PKG (FRONT VIEW)

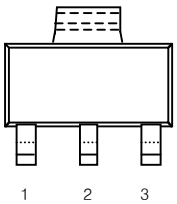

LM1117
REGULATOR

PIN FUNCTION
1. Adj/Gnd
2. Vout
3. Vin

KP1010 photocoupler

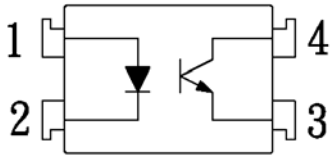

1. Anode
2. Cathode
3. Emitter
4. Collector

TO–263 (D2 PKG, FRONT VIEW)

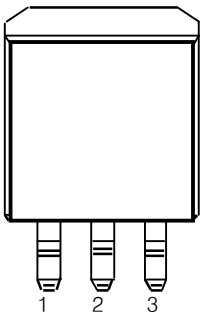

PIN FUNCTION
1. Adj/Gnd
2. Vout
3. Vin

CUP12035Z

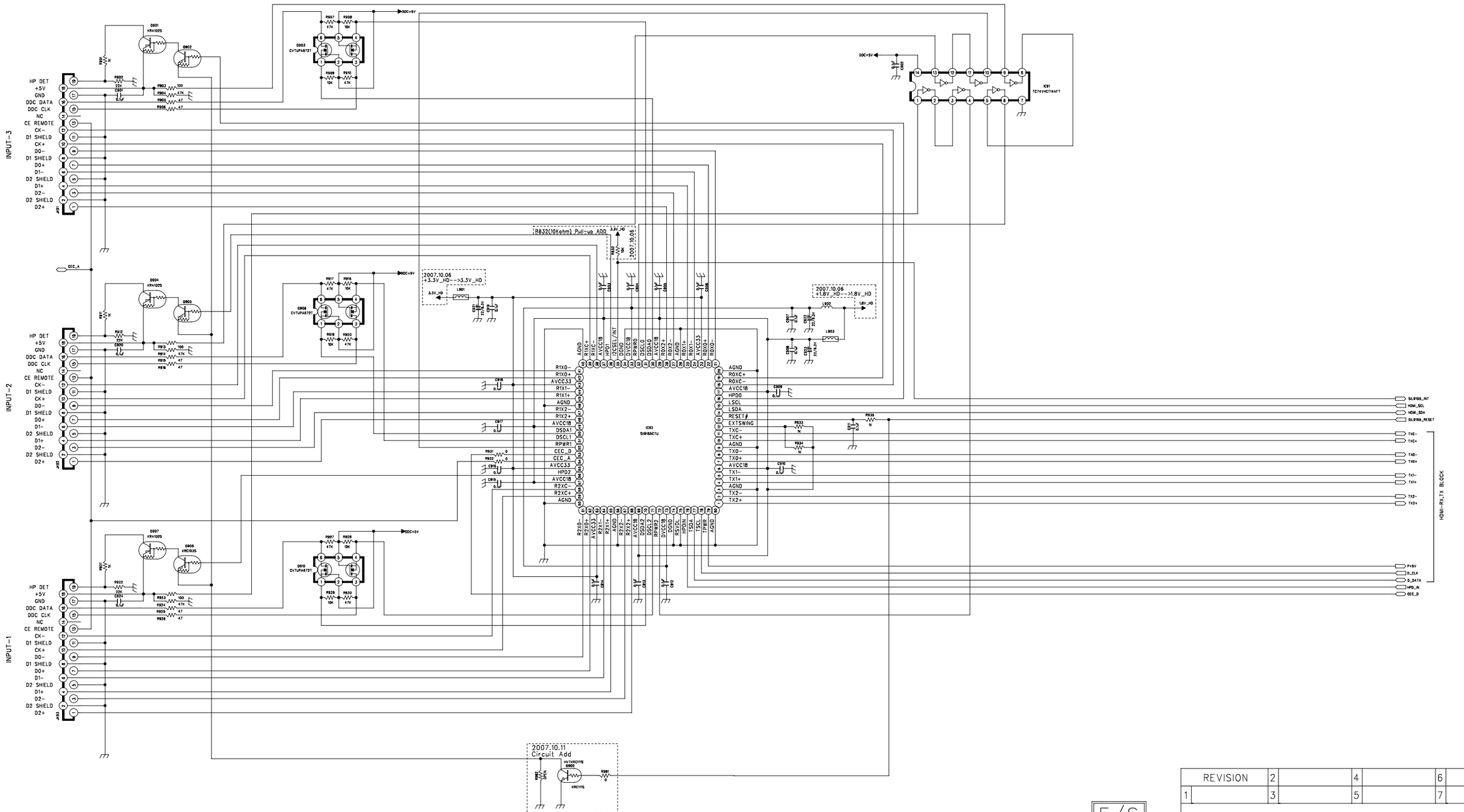

E/S

E

REVISION	2		4		6	
1		3		5		7

SCHEMATIC DIAGRAM			SHEET 1/4
MODEL	AVR255/355		
DESIGN	CHECK	APPROVE	DRAWING NO
M.S KIM	W.Y YANG	G.S WEY	2035SCEZ (HDMI-INPUT) 1/1
07.14.07	07.14.07	07.14.07	

CUP12035Z

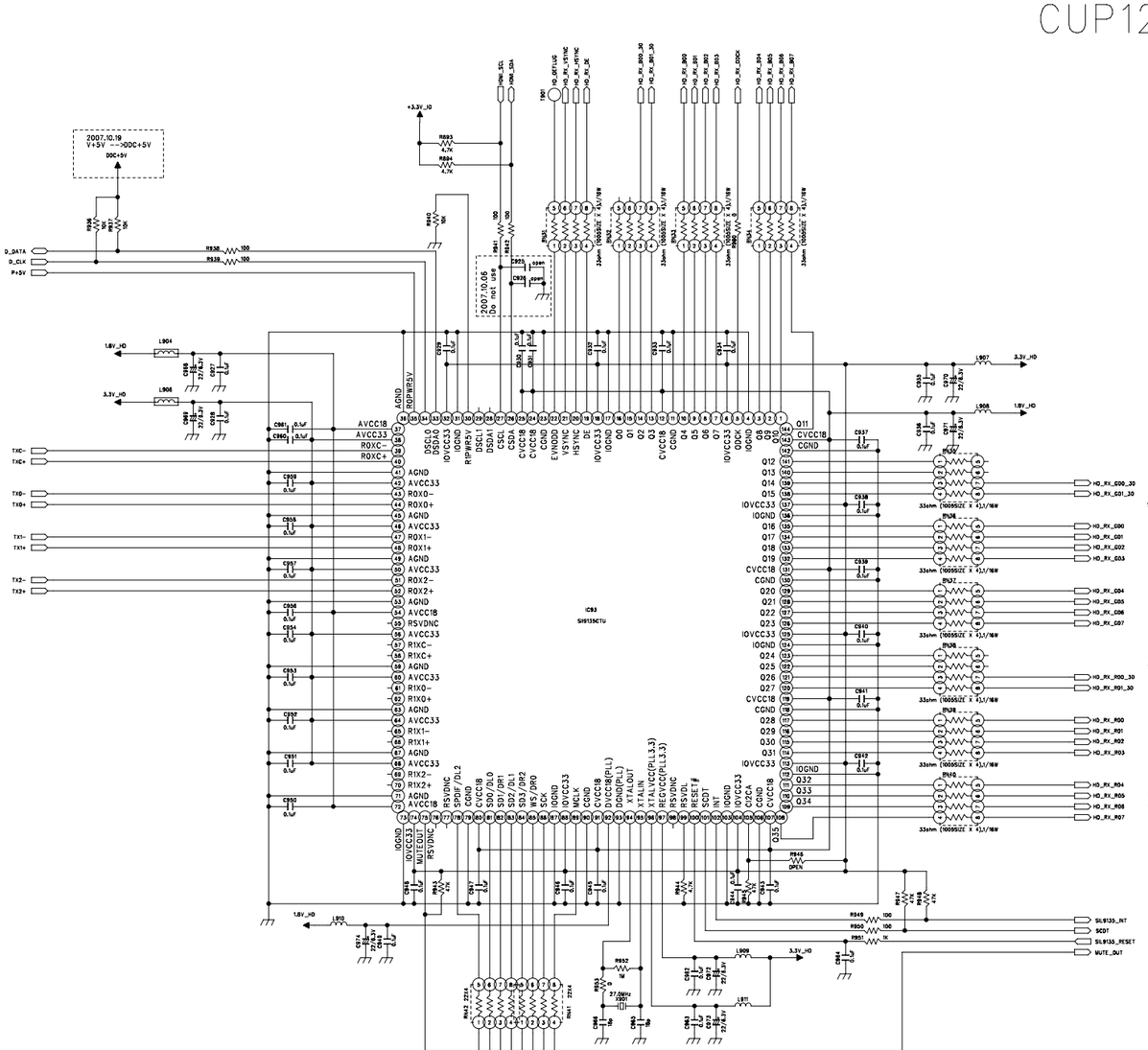

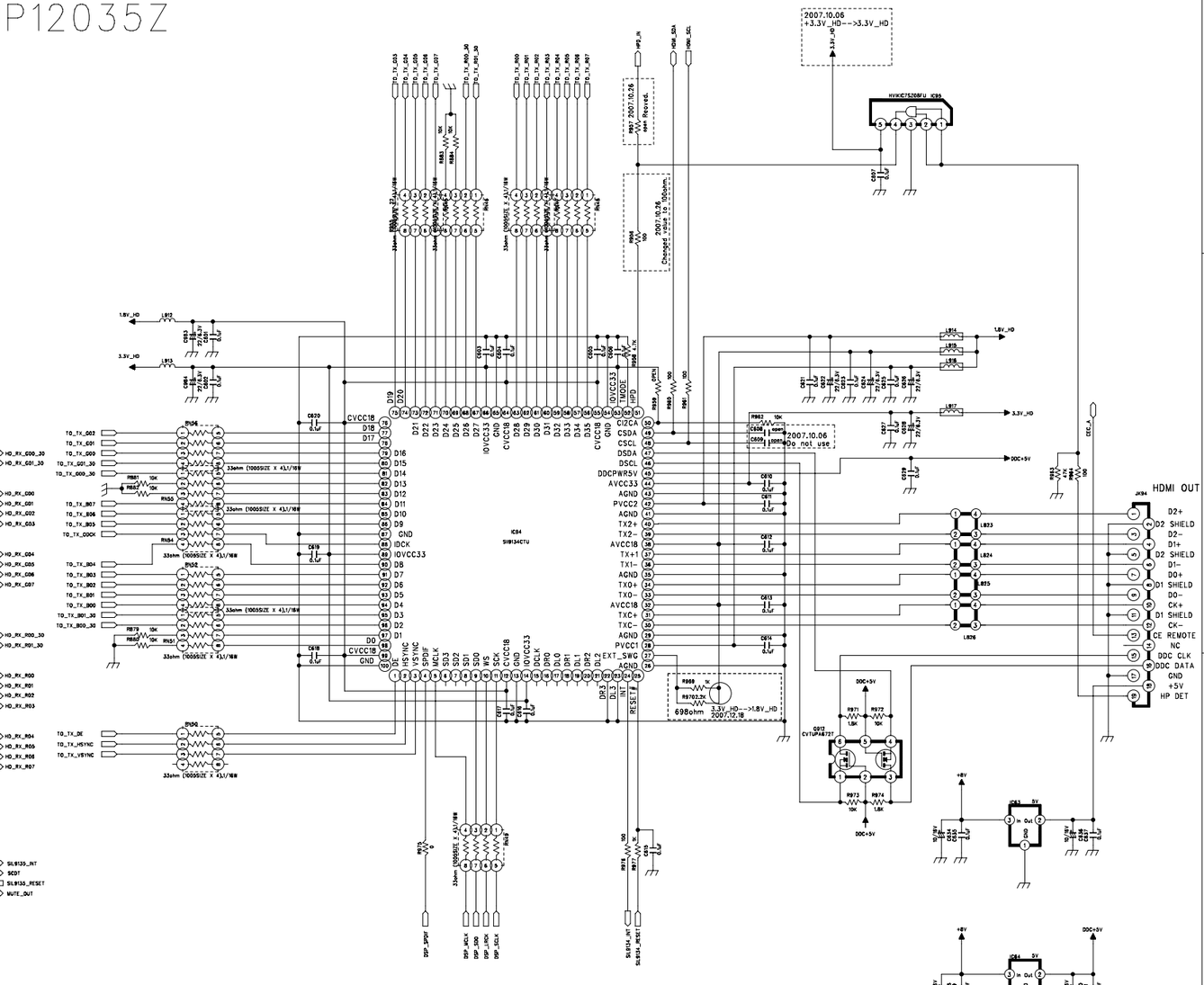

REVISION	1	2	3	
SCHEMATIC DIAGRAM				SHEET
MODEL	AVR255/355			2/4
DESIGN	CHECK	APPROVE	DRAWING NO	
M.S KIM	W.Y YANG	G.S WEY	2035SCEZ (HDMI-RX,TX)	1/1
07.14.07	07.14.07	07.14.07		

CUP12035Z

ANALOG VIDEO INPUT PORT

COMPONENT IN : 3EA
COMPOSITE IN : 1EA
S_VIDEO IN : 1EA

RGB 10BIT INPUT

B 8BIT INPUT

G 8BIT INPUT

R 8BIT INPUT

*OPTION(Do not use)

*GPROBE

*COMMUNICATION WITH MCU

*CONTROL ROM/VIDEO ENCODER

*EEPROM

*IR_IN/NO USE

*Add 08.01.16 Reserved GPIOs.

2007.10.06 Connect pin3 to CHGND

*DDR MEMORY INTERFACE

*FLASH MEMORY INTERFACE

B 8BIT OUTPUT

G 8BIT OUTPUT

R 8BIT OUTPUT

TTL OUTPUT

B 8BIT OUTPUT

RGB 10BIT OUTPUT
TTL OUTPUT

* Need to change 2A

REVISION	2	4	6
1	3	5	7

SCHEMATIC DIAGRAM — SHEET 3/4

MODEL	AVR 255/355	
DESIGN	CHECK	APPROVE	DRAWING NO
M.S KIM	W.Y YANG	G.S WEY	2035SCEZ (TORINO) 1/1
07.14.07	07.14.07	07.14.07	

CUP12035Z

DO NOT MOVE.

FLI30336 ANALOG INPUT

ADV7342 ANALOG OUTPUT

TO MCU

*OPTION(Do not use)

COMP_PB_OUT<-->COMP_PR_OUT

FS_SELECT

SD(13.5MHZ) MODE : LOW
HD(30MHZ) MODE : HIGH
Control by Torino

#VIDEO ENCORDER PART

44	DAC A	Y
43	DAC B	Pb
42	DAC C	Pr
39	DAC D	CVBS
38	DAC E	S-Y
37	DAC F	S-C

R854: 3.9kohm-->6.8kohm
R855: 6.8kohm-->4.3kohm
2007.11.03

Red DATA Input

Blue DATA Input

Green DATA Input

CLOCK DOUBLER(13.5MHz * 2 = 27MHz)

	CLK1
S1:HIGH	iCLK
S1:LOW	2*iCLK

#DDR SDRAM *2EA

DRAWING NO

#FLASH MEMORY

REVISION	2	4	6
1	3	5	7

SCHEMATIC DIAGRAM				SHEET
MODEL	AVR255/355			1/4
DESIGN	CHECK	APPROVE	DRAWING NO	
M.S KIM	W.Y YANG	G.S WEY	2035SCEZ (ADV7342+MEM.)	1/1
07.14.07	07.14.07	07.14.07		

< REGULATOR PCB >

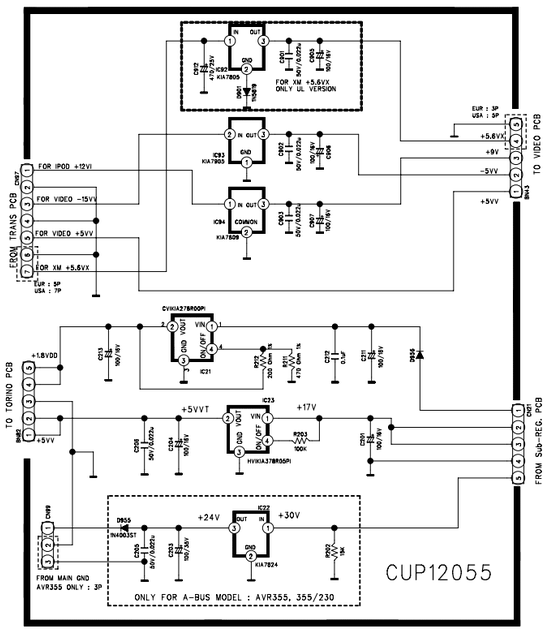

< Sub-REGULATOR PCB >

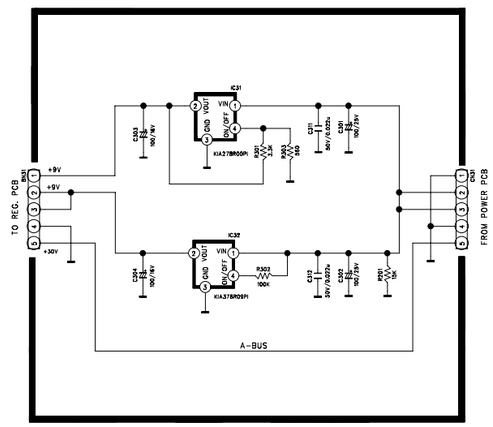

LPP

ISSUE

REVISION	2	4	6	
1	3	5	7	

SCHEMATIC DIAGRAM			SHEET
MODEL	AVR 254/255/354/355		1/1
DESIGN	CHECK	APPROVE	DRAWING NO
J.T.B	Y.Y.W	K.S.W	CUP12055Z (REGULATOR) 1/1
08.01.19			

CUP12032Z

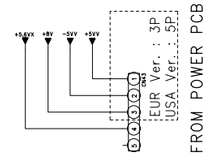

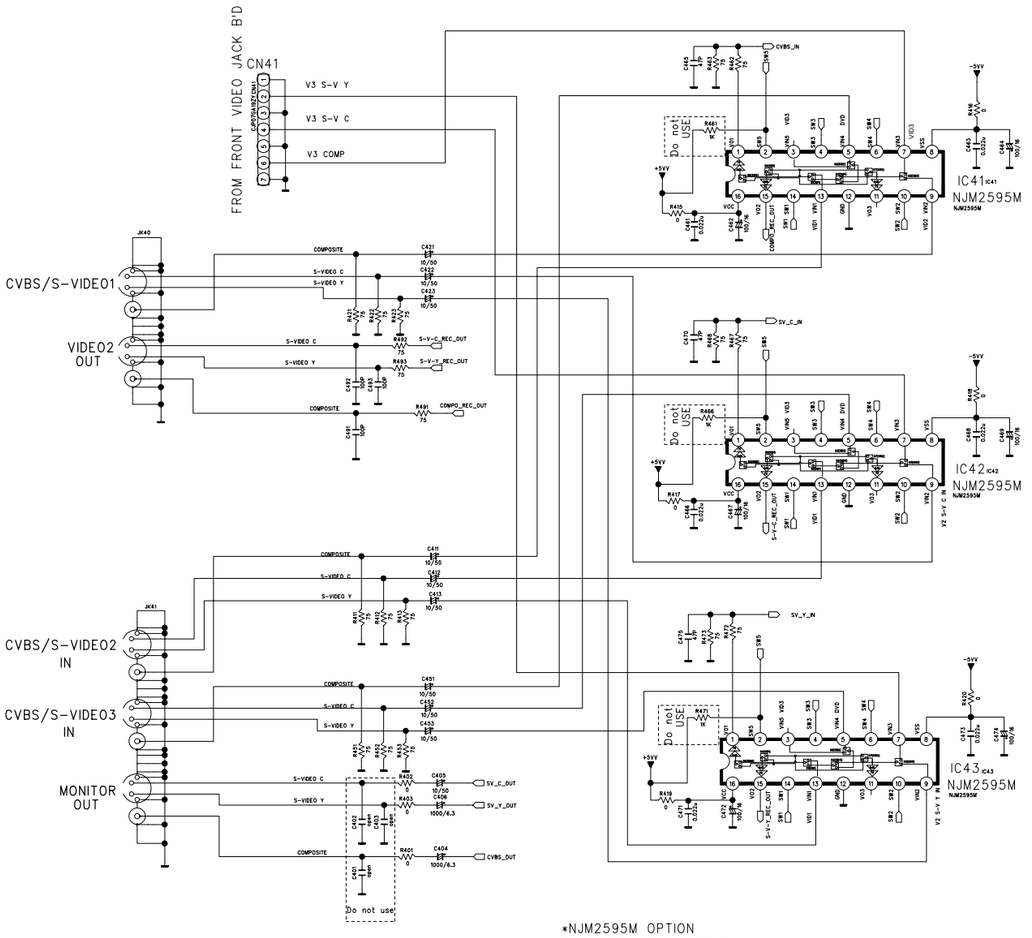

FUNC.	SW1	SW2	SW3	SW4	SW5
CVBS/S-V1	H	L	L	L	H
CVBS/S-V2	L	H	L	L	H
CVBS/S-V3	H	L	L	H	H
FRONT CVBS/S-V	H	H	L	L	H
IPOD	H	L	H	H	H

* DEFINITION OF I2C REGISTER (NJW1321)

I2C BUS FORMAT

MSB				LSB	MSB			LSB	MSB			LSB		
S(1BIT)	SLAVE ADDRESS(7BIT)				A(1BIT)	DATA(8BIT)			A(1BIT)	DATA(8BIT)			A(1BIT)	P(1BIT)

S : Starting Term
A : Acknowledge Bit
P : Ending Term

SLAVE ADDRESS

MSB Slave Address(8BIT)							MSB	Hex
1	0	0	0	0	0	ADR(1BIT)	R/NOT W(1BIT)	--

R/NOT W : Set the Write Mode or Read Mode.
ADR : Set the Slave Address by " ADR" terminal.
R/NOT W = 0 : WRITE MODE, ADR = 0/1 ; ADR=0 Hex94(h), ADR=1 Hex96(h)
R/NOT W = 0 : READ MODE, ADR = 0/1 ; ADR=0 Hex95(h), ADR=1 Hex97(h)

CONTROL REGISTER TABLE
<WRITE MODE>

NO.	BIT							
	D7	D6	D5	D4	D3	D2	D1	D0
DATA 1	PS1	PS2	OUT1			OUT2		
DATA 2	AUX0		AUX1		AUX2		AUX3	

PS : POWER SAVE
=> PS = 1 ; POWER SAVE ON (MUTE), PS = 0 ; POWER SAVE OFF (OUT ON)
OUT : OUTPUT
AUX : AUXILIARY (CONTROL SIGNAL OUTPUT)

<READ MODE>

NO.	BIT							
	D7	D6	D5	D4	D3	D2	D1	D0
DATA	PORT0		PORT1		PORT2		PORT3	

PORT : INPUT

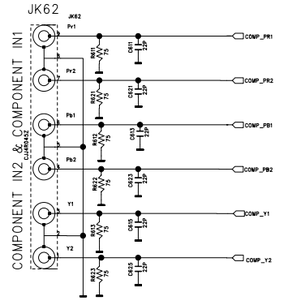

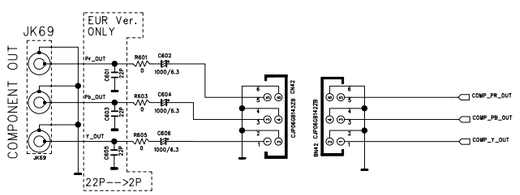

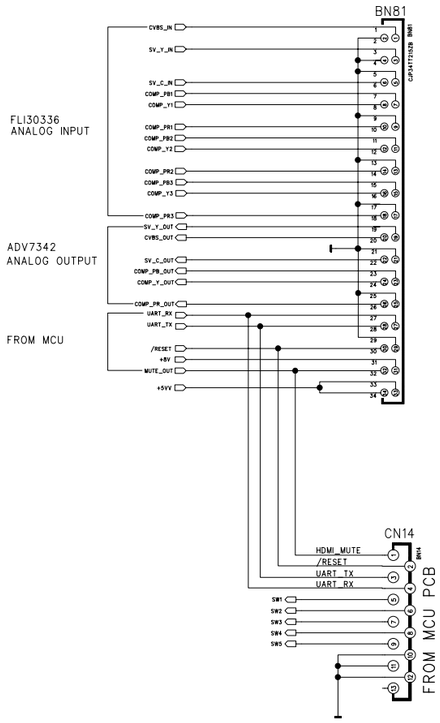

• AVR345
*NO.4

REVISION	2		4		6	
1		3		5		7

SCHEMATIC DIAGRAM			SHEET
MODEL	AVR254 /255		1/2
DESIGN	CHECK	APPROVE	DRAWING NO
M.S.K	W.Y.Y	K.S.W	2032SCEZ
06.08.23	06.	06.	(VIDEO) 1/1

.08.08

DPP

CUP12032Z

XM READY(Only for US model)

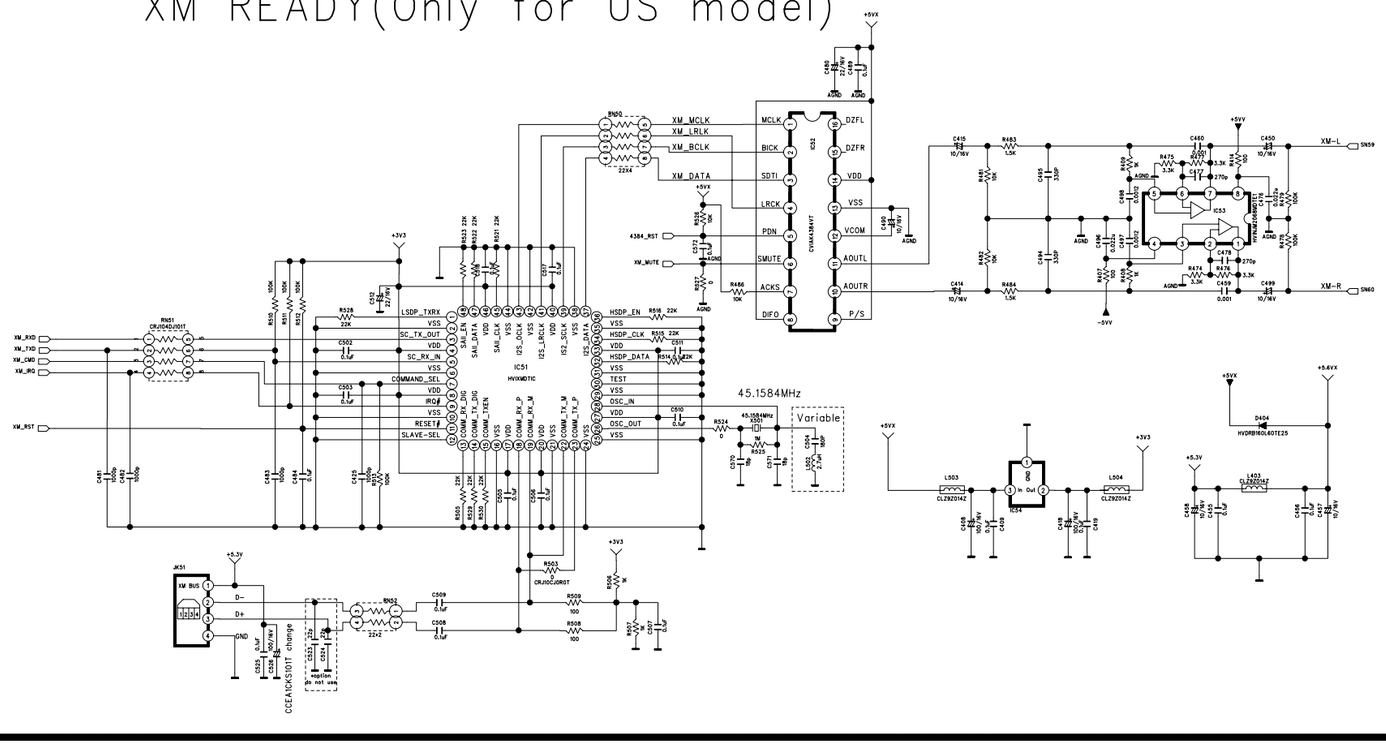

I-POD

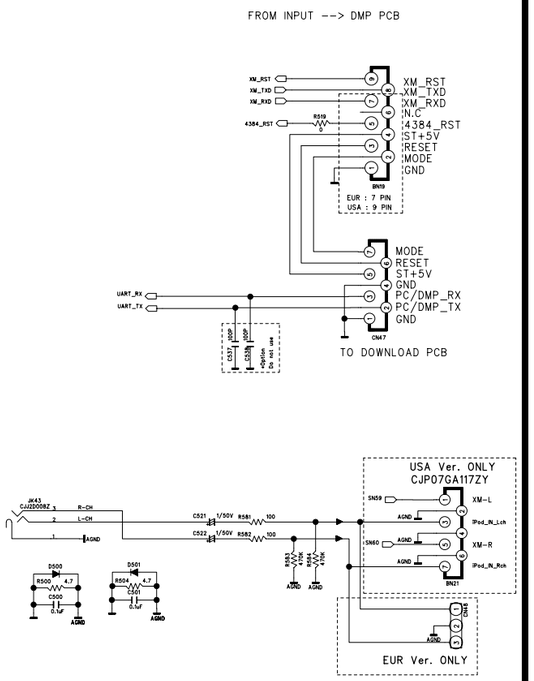

REVISION	2	4	6	
1	3	5	7	

SCHEMATIC DIAGRAM			SHEET
MODEL	AVR254 / 255		1/4
DESIGN	CHECK	APPROVE	DRAWING NO
M.S.K	W.Y.Y	K.S.W	2032SCEZ (AMP)
05.00.00	05.00.00	05.00.00	1/1

CUP12025Z

CUP12025-1 [FIP PCB]

CUP12025-5 [PHONE JACK PCB]
[PHONE/VID3(DIGITAL)]

CUP12025-6 [VR JACK PCB] [VR/HEAD PHONE&(MIC)/VID3(ANLOG)]

[KEY PCB] CUP12025-2

[STAND BY PCB]
CUP12025-3

[PWR.(MOMS)SW PCB]
CUP12025-4

CUP12025-8 [BLACKET JACK PCB FOR CARD CABLE]

CUP12025-9 [BLACKET JACK PCB FOR PHONE JACK]

REVISION	2		4		6	
1		3		5		7

SCHEMATIC DIAGRAM — SHEET 1/7

MODEL	AVR154/254/354		
DESIGN	CHECK	APPROVE	DRAWING NO
S.H.YANG	W.Y.YANG	G.S.WEY	2025SCDZ (FRONT) 1/1
07.12.07	07.12.07	07.12.07	

LPP

AVR355 input_0208.sch-1 - Fri Feb 08 15:54:26 2008

R201 ~ R216 : 470ohm --> 100ohm
R219 ~ R223 : 470ohm --> 100ohm
R225 ~ R226 : 470ohm --> 100ohm

CD
TAPE R/O P/B
VIDEO3 R/O P/B
VIDEO2
VIDEO1 R/O P/B
DVD
8CH Lch
8CH Rch
8CH SLch
8CH SRch
8CH Cch
8CH SUB
8CH SBL
8CH SBR

AVR345(UL) ONLY
AVR345 (EUR) ONLY

CVNJN1197CFC2
IC20

MIC SIGNAL
From FRONT INPUT
FROM CONNECT B'D
FROM TUNER MODULE
FROM REG. B'D
DGND

** IMPORTANT SAFETY NOTICS.
COMPONENTS IDENTIFIED BY ⚠ MARK HAVE SPECIAL CHARACTERISTICS.
IMPORTANT FOR SAFETY. WHEN REPLACING ANY OF THESE COMPONENTS
USE ONLY MANUFACTURER'S SPECIFIED PARTS.
** THE UNIT OF RESISTANCE IS OHM.
K=1000 OHM , M=1000 KOHM
** THE UNIT OF CAPACITANCE IS MICROFARAD. (uF)
pF=10^{-6} uF
** THIS SCHEMATIC DIAGRAM MAY MODIFIED AT ANY TIME WITH THE
IMPROVEMENT OF PERFORMANCE.

DPP

UE
MI
2007.10.18

REVISION	2	4	6	
1	3	5	7	

SCHEMATIC DIAGRAM — SHEET

MODEL	AVR254/255/354/355	1/3

DESIGN	CHECK	APPROVE	DRAWING NO
C.B.LEE	W.Y.YANG	G.S.WEY	2029SCLZ (INPUT) 1/1
07.10.18			

CUP12029

HDMI SPDIF MODE : DIR MASTER
HDMI I2S MODE : HDMI MASTER
ADC MODE : DSP MASTER
DIR MODE : DIR MASTER

*OPTION : EMC COUNTERMEASUER

DATA	CS49700	SDRAM
EXT_D15/SD_D7	29	12
EXT_D14/SD_D6	30	11
EXT_D13/SD_D5	31	9
EXT_D12/SD_D4	32	8
EXT_D11/SD_D3	34	6
EXT_D10/SD_D2	35	5
EXT_D9/SD_D1	37	3
EXT_D8/SD_D0	39	2
EXT_D7/SD_D15	40	49
EXT_D6/SD_D14	41	48
EXT_D5/SD_D13	42	46
EXT_D4/SD_D12	43	45
EXT_D3/SD_D11	45	43
EXT_D2/SD_D10	46	42
EXT_D1/SD_D9	48	40
EXT_D0/SD_D8	49	39

Address	CS49700	SDRAM
EXT_A19	88	
EXT_A18	87	
EXT_A17	85	
EXT_A16	84	
EXT_A15	82	
EXT_A14/SD_A13	77	
EXT_A13/SD_A14	75	19
EXT_A12/SD_A10	74	20
EXT_A11/SD_A12	55	
EXT_A10/SD_A11	56	
EXT_A9/SD_A9	58	32
EXT_A8/SD_A8	59	31
EXT_A7/SD_A7	61	30
EXT_A6/SD_A6	62	29
EXT_A5/SD_A5	64	28
EXT_A4/SD_A4	67	27
EXT_A3/SD_A3	68	24
EXT_A2/SD_A2	70	23
EXT_A1/SD_A1	71	22
EXT_A0/SD_A0	72	21

<=> HDMI BOARD

REVISION	2	4	6
1	3	5	7

SCHEMATIC DIAGRAM — SHEET

MODEL	AVR254/255/354/355	2/3

DESIGN	CHECK	APPROVE	DRAWING NO
C.B.LEE	W.Y.YANG	G.S.WEY	2029SCLZ (DSP) 1/1
07.10.18			

DPP

AVR355 input_0208.sch-2 - Fri Feb 08 15:54:52 2008

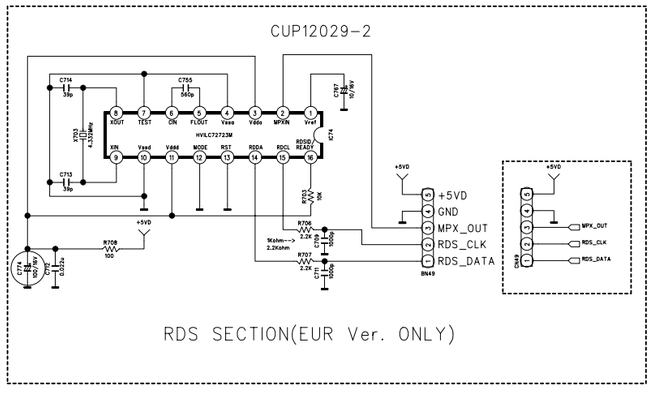

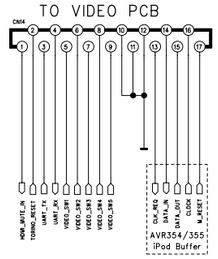

U-COM	AVR255	AVR355	AVR155
PIN 97	HDMI_MUTE_IN	HDMI_MUTE_IN	N.A
PIN 86	TORINO_RESET	TORINO_RESET	N.C
PIN 21	UART_TX(TORNO&PC)	UART_TX(TORNO&PC)	UART_TX(PC)
PIN 22	UART_RX(TORNO&PC)	UART_RX(TORNO&PC)	UART_RX(PC)
PIN 81	VIDEO_SW1	VIDEO_SW1	N.A
PIN 82	VIDEO_SW2	VIDEO_SW2	OSD_CS1
PIN 83	VIDEO_SW3	VIDEO_SW3	OSD_CLK
PIN 84	VIDEO_SW4	VIDEO_SW4	OSD_DA
PIN 85	VIDEO_SW5	VIDEO_SW5	OSD_M
PIN 80		CLOCK	HDMI MUX_SDA
PIN 79		DATA_OUT	HDMI MUX_SCLK
PIN 77		DATA_IN	OSD_H
PIN 76		CLK-REQ	

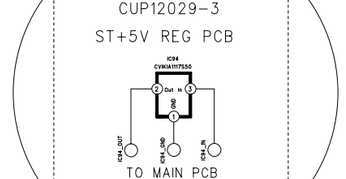

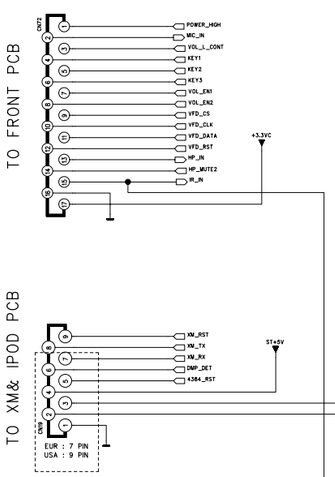

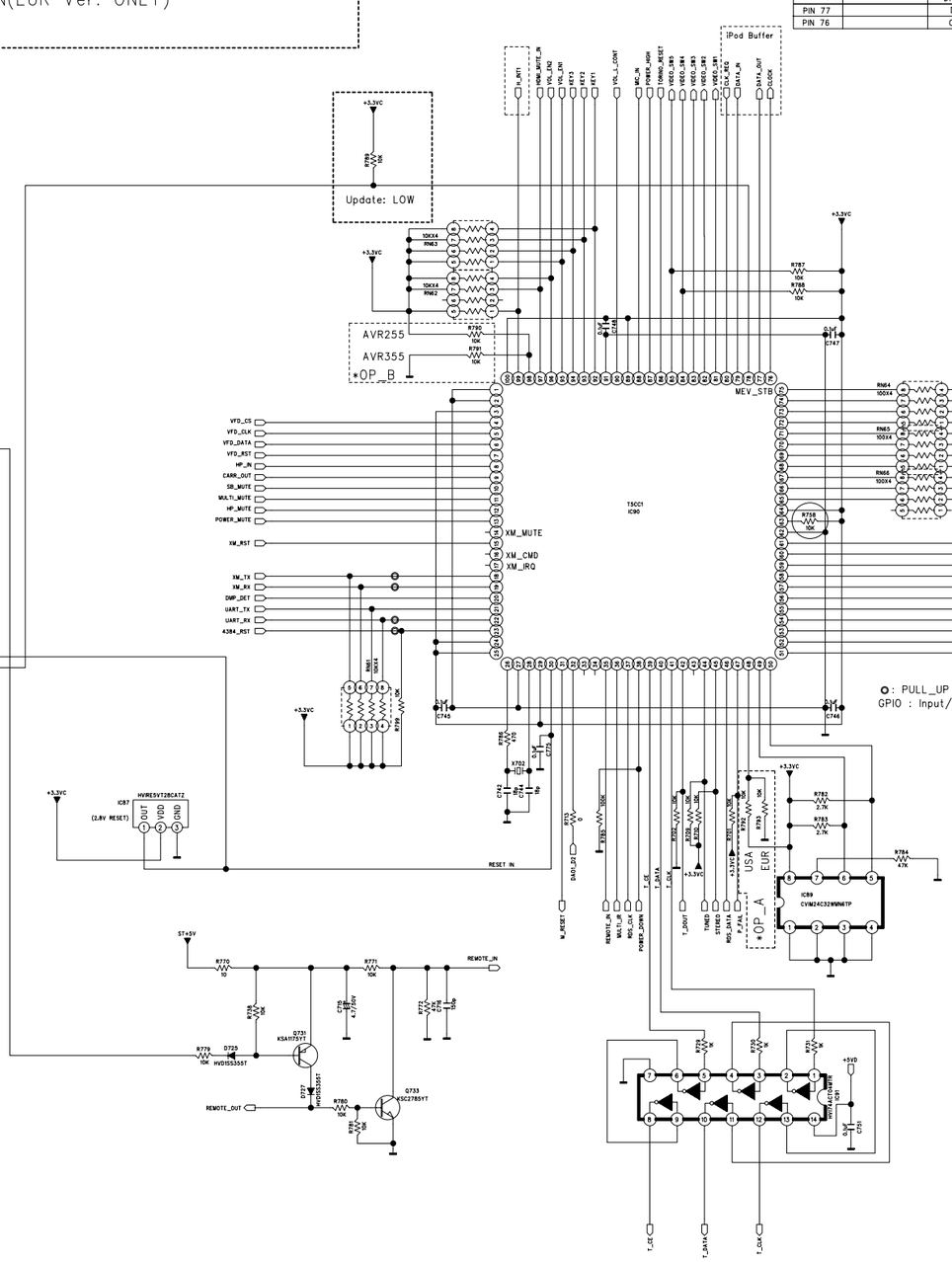

* MODEL OPTION *

MODEL	OP_A(PIN48)	OP_B(PIN98)
AVR355	HIGH(R792)	LOW(R791)
AVR354	HIGH(R792)	LOW(R791)
AVR254	HIGH(R792)	HIGH(R790)
AVR355/230	LOW(R793)	LOW(R791)
AVR255/230	LOW(R793)	HIGH(R790)

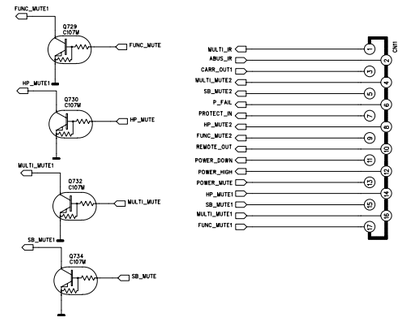

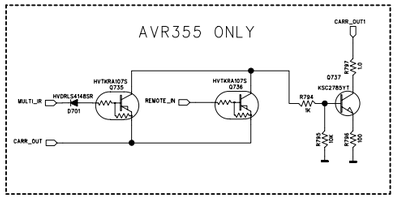

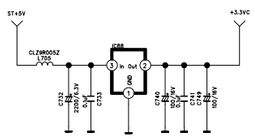

○ : PULL_UP
GPIO : Input/Out Port(without pull_up resistor)

DPP

UE
MI
2007.10.18

REVISION	2	4	6
1	3	5	7

SCHEMATIC DIAGRAM — SHEET 3/3

MODEL	AVR254/255/354/355		
DESIGN	CHECK	APPROVE	DRAWING NO
C.B.LEE	W.Y.YANG	G.S.WEY	2029SCLZ (CPU) 1/1
07.10.18			

AVR355 input_0208.sch-3 - Fri Feb 08 15:55:29 2008

SR-CH

BL-CH

SL-CH

EXCEPT AVR154/155

BR-CH

C-CH

FR-CH

FL-CH

GAIN	R561, R562, R563, R564, R565, R850 R851
AVR154/155	1.8K
AVR255/355	1.6K

AVR354/355 ONLY

ONLY FAN USING

DC PROTECTOR

THERMAL PROTECTOR

OVERLOAD DETECTION

FOR USING FAN

JW92: AVR154/155 ONLY

EXCEPT AVR154/155

ONLY AVR154/155

AVR254/255/354/355 PART

TO REMOTE IN/OUT B'D

FROM TRANS

AC IN

TO REG B'D

JW90,JW91 : ALL MODELS

JW93, OL91, F902 : EXCEPT AVR154

FROM INPUT B'D

FROM TRANS B'D

AVR254/255/354/355 OPTION

** IMPORTNAT SAFETY NOTICE.
INPORTANT FOR SAFETY WHEN REPLACING ANY OF THESE COMPONENTS
USE ONLY MANUFACTURE'S SPECIFIED PARTS.
** THE UNIT OF RESISTANCE IS OHM.
K=1000 OHM, M=1000 KOHM.
** THE UNIT OF CAPACITANCE IS MICROFARAD (uF)
pF = 10^-6 uF
** THIS SCHEMATIC DIAGRAM MAY MODIFIED AT ANY TIME WIHE THE
IMPROVEMENT OF PERFORMANCE

REVISION	1	2	3	SHEET
SCHEMATIC DIAGRAM				
MODEL	AVR154/155/254/255/354/355			2/7
DESIGN	CHECK	APPROVE	DRAWING NO	
C.B.LEE	W.Y.YANG	G.S.WEY	2026SCLZ (MAIN)	1/1
07.08.23				

CUP12027-1

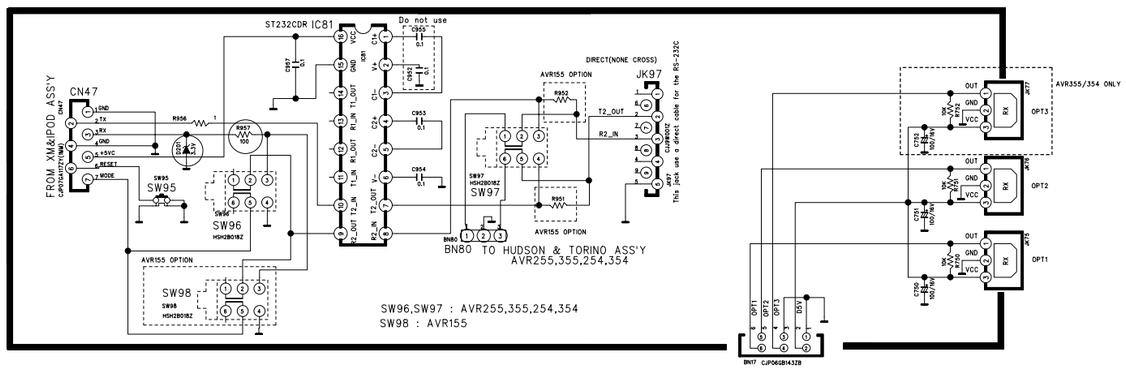

< OPTICAL IN & RS-232 PCB >

< BIAS T.R PCB >

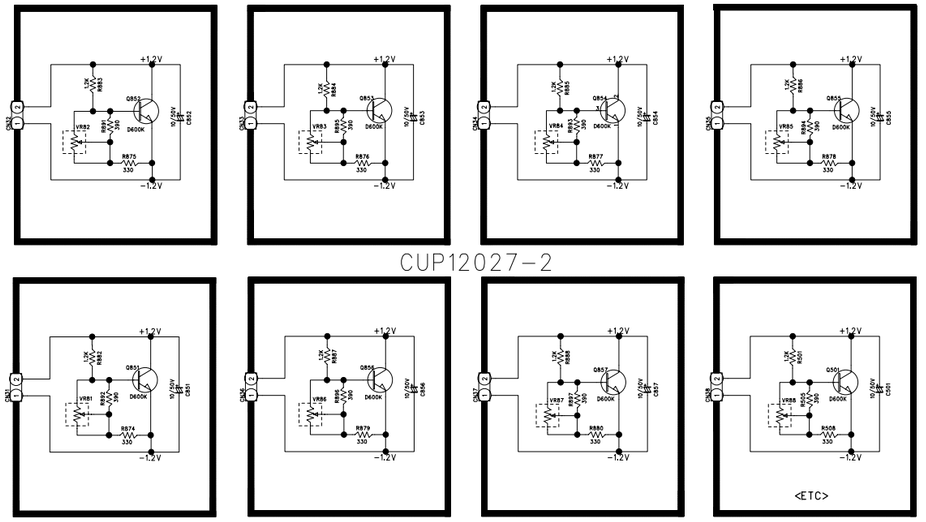

CUP12027-3

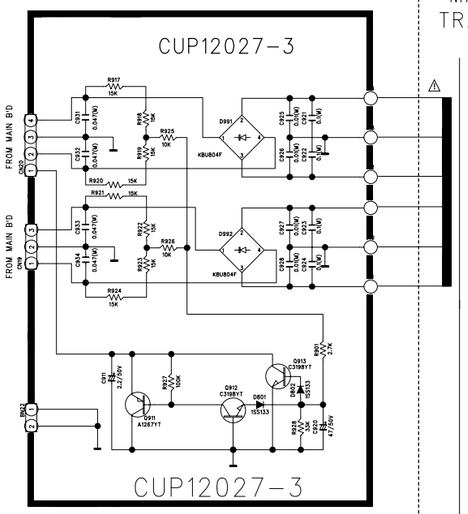

CUP12027-3

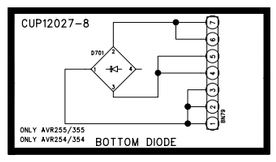

USA : AC120V 60Hz
EUR : AC230V 50Hz

MAIN TRANS

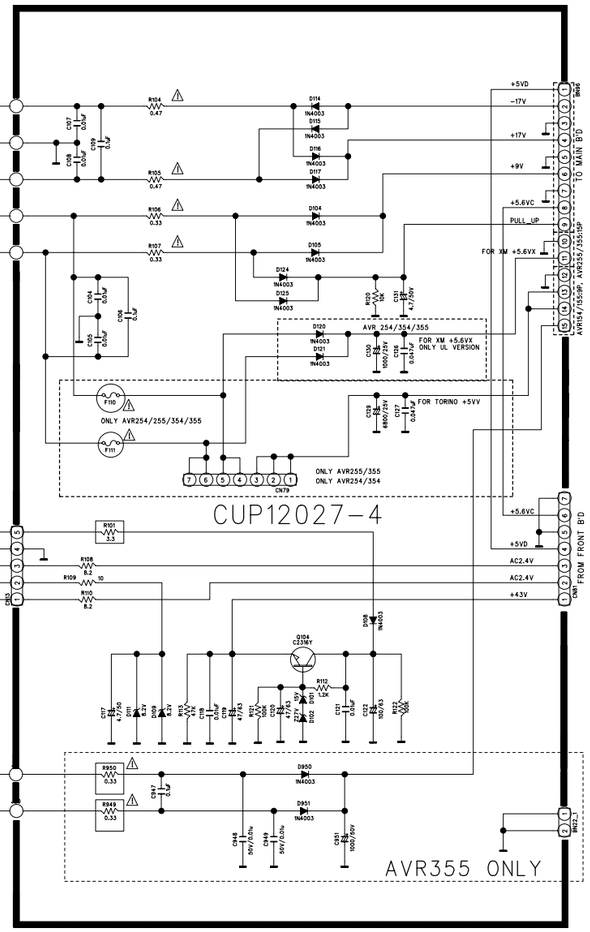

CUP12027-4

< TRANS PCB >

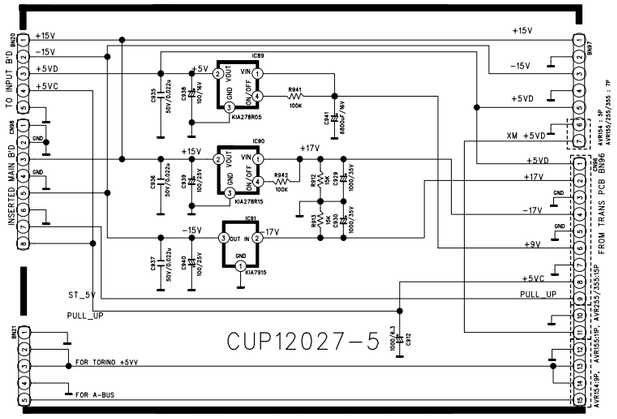

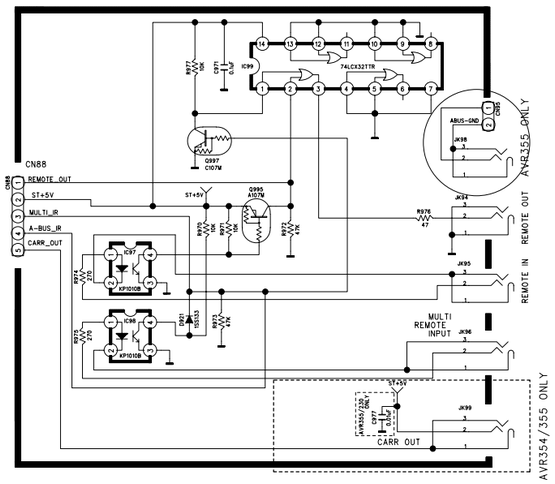

AVR254/255/354/355 ONLY CUP12027-7

< REMOTE IN/OUT PCB >

CUP12027-6 ONLY AVR154/155 USE

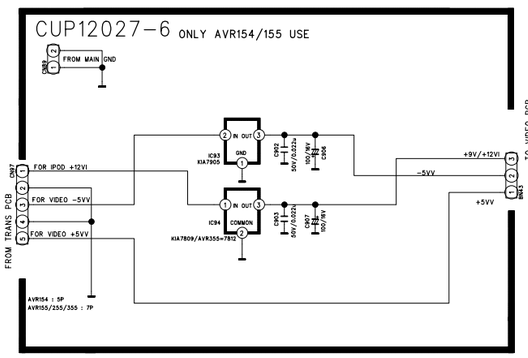

< REGULATOR PCB >

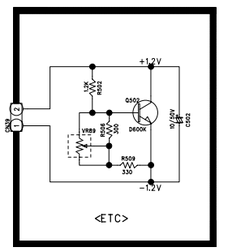

M P

SUE
2008.01.2

REVISION	2	4	6
1	3	5	7

SCHEMATIC DIAGRAM			SHEET
MODEL	AVR x54/x55		1/1
DESIGN	CHECK	APPROVE	DRAWING NO
J.T.B	Y.Y.W	K.S.W	CUP12027Z (POWER)
08.01.22			1/1

AVR254 WIRING DIAGRAM

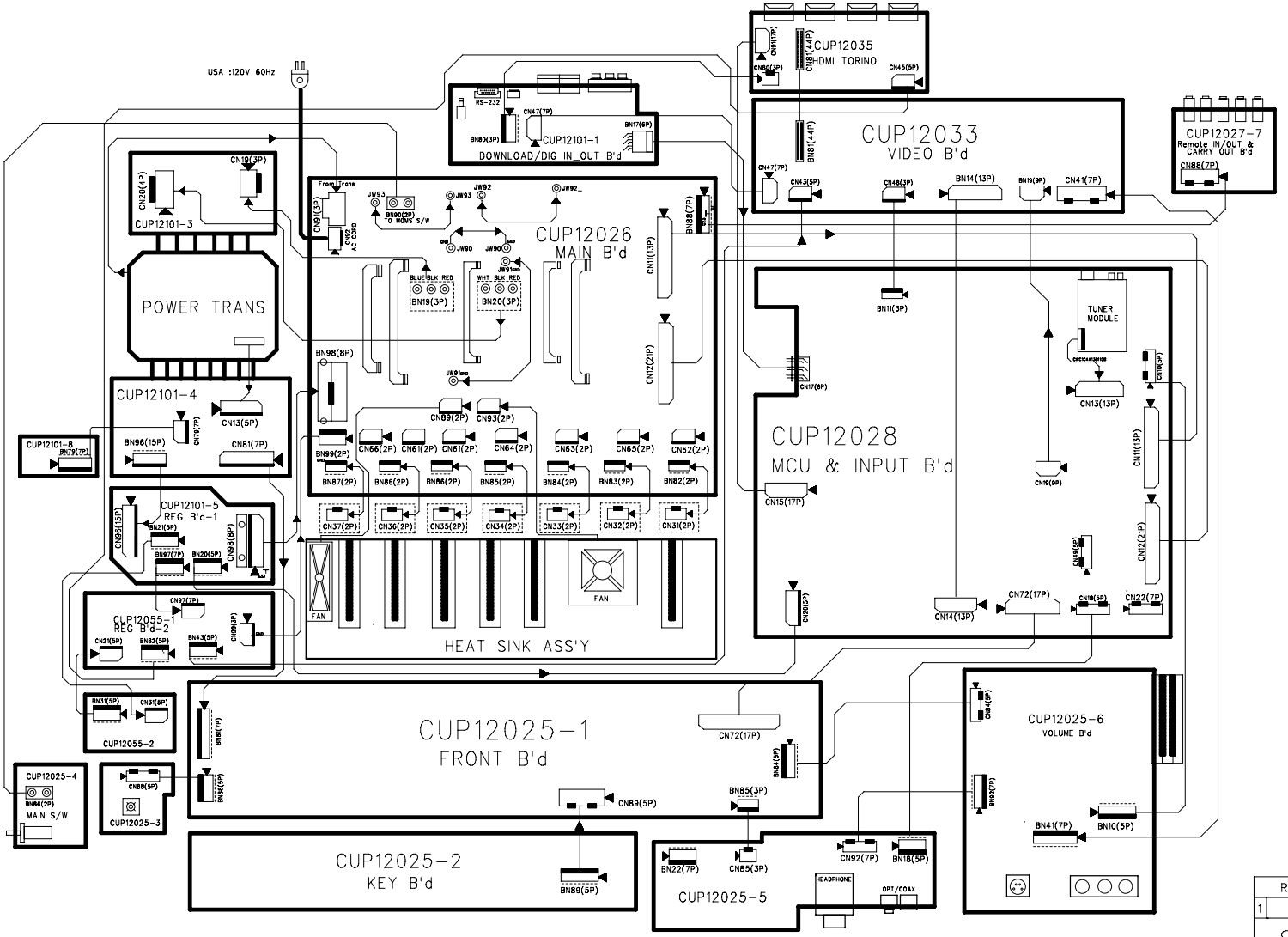

REVISION	2		4		6	
1		3		5		7

SCHEMATIC DIAGRAM			SHEET
MODEL	AVR254		1/1
DESIGN	CHECK	APPROVE	DRAWING NO
J.T.B	W.Y.Y	K.S.W	WIRING DIAGRAM
08.03.11	08.03.11	08.03.11	1190SCDZ 1/1